Guidelines For Good Working Practice In High Pressure Compressed Air

ITA Working Group n°5
Health & Safety in Works

N° ISBN: 978-2-9700858-8-1

ITA REPORT N°010-V2 / APRIL 2015

British Tunnelling Society

ASSOCIATION INTERNATIONALE DES TUNNELS ET DE L'ESPACE SOUTERRAIN
AITES

ITA
INTERNATIONAL TUNNELLING AND UNDERGROUND SPACE ASSOCIATION

ITA Report n°010 - **Guidelines for good working practice in high pressure compressed air** - N°ISBN: 978-2-9700858-8-1 / AVRIL 2015
Layout : Longrine – Avignon – France – www.longrine.fr

The International Tunnelling and Underground Space Association/Association Internationale des Tunnels et de l'Espace Souterrain (ITA/AITES) publishes this report to, in accordance with its statutes, facilitate the exchange of information, in order: to encourage planning of the subsurface for the benefit of the public, environment and sustainable development to promote advances in planning, design, construction, maintenance and safety of tunnels and underground space, by bringing together information thereon and by studying questions related thereto. This report has been prepared by professionals with expertise within the actual subjects. The opinions and statements are based on sources believed to be reliable and in good faith. However, ITA/AITES accepts no responsibility or liability whatsoever with regard to the material published in this report. This material is: information of a general nature only which is not intended to address the specific circumstances of any particular individual or entity; not necessarily comprehensive, complete, accurate or up to date; This material is not professional or legal advice (if you need specific advice, you should always consult a suitably qualified professional).

Guidelines For Good Working Practice In High Pressure Compressed Air

ITA Working Group n°5
Health & Safety in Works

PREPARED JOINTLY

BY INTERNATIONAL TUNNELLING ASSOCIATION WG 5

"HEALTH & SAFETY IN WORKS"

IN ASSOCIATION WITH BRITISH TUNNELLING SOCIETY

COMPRESSED AIR WORKING GROUP

British Tunnelling Society

>> Foreword

At its meeting in Vancouver in 2010, International Tunnelling Association Working Group 5 identified the need for guidance on the use of high pressure compressed air. WG5 defined this as "work in compressed air at pressures above historical statutory limits, which in most countries are between 3 and 4 bar (gauge), and which involves the use of breathing mixtures other than compressed natural air and can involve the use of saturation techniques".

High pressure compressed air working was a topic of interest which had previously been addressed by the British Tunnelling Society Compressed Air Working Group and which BTS CAWG had identified as a significant development in the use of hyperbaric techniques on site for which no guidance existed.

Consequently the ITA and BTS CAWG came together to jointly publish the first edition of these guidelines in 2012 for use by the international tunnelling community.

In 2013 a review and update of this document began, to take account of the relatively rapid development of this technique. That process has now been completed.

Comment and feedback continue to be welcomed and should be made to the ITA Secretariat through the website www/ita-aites.org.

It is not the purpose of this document to give guidance on commercial matters. However the nature of HPCA work is such that expensive equipment can be required at short notice or equally it can stand unused for long periods of time. Consequently ITA WG5 recommends that the tunnelling industry should standardise shuttle dimensions, capacity and pressure capability so that equipment can be interchangeable and reusable between projects. Standardising dimensions to allow shuttles to be containerised for ease of transport is also suggested.

>> TABLE OF CONTENTS

GLOSSARY OF TERMS AND ABBREVIATIONS

1. INTRODUCTION

2. LEGISLATION, STANDARDS, GUIDANCE ETC

3. NOTIFICATIONS, EXEMPTIONS AND APPROVALS

4. ORGANISATION OF WORKS IN HPCA

5. SAFE SYSTEM OF WORK AND OPERATIONAL PROCEDURES!

6. PLANT, EQUIPMENT AND GAS SUPPLY

7. OCCUPATIONAL HEALTH

8. HYPERBARIC PROCEDURES

9. RECORD KEEPING

10. EMERGENCY PROCEDURES AND FIRE

11. INFORMATION, INSTRUCTION AND TRAINING

12. INDUSTRY STANDARD FLANGE DETAILS

13. ACKNOWLEDGEMENTS

14. APPENDIX 1 - CONTENTS OF SUBMISSION

Appointed Doctor or Appointed Medical Practitioner
A doctor formally appointed by the national regulatory authorities to certify medical fitness in compressed air workers (not required in all jurisdictions). Ideally this duty should be undertaken by the Contract Medical Adviser.

Breathing mixture
A non-air respirable mixture, such as oxygen and nitrogen (nitrox); oxygen and helium (heliox) or oxygen, nitrogen and helium (trimix) capable of supporting human life under appropriate hyperbaric conditions.! !

BTS "Guide"
The British Tunnelling Society's document "Guide to the Work in Compressed Air Regulations 1996".

Built in Breathing System (BIBS)
Closed circuit system for supplying gas to a mask and removal of exhaled gas from the mask to a dump location (normally outside of the pressurised environment).

Compressed air worker (CAW)
Person certified medically fit for working in compressed air. For HPCA this would include psychological fitness also.

Contract Medical Adviser (CMA)
A suitably qualified and experienced medical practitioner competent in occupational health and hyperbaric medicine who is permitted to practice in the location at which the HPCA work is being undertaken and who is responsible for all medical aspects of HPCA work.

Contractor in Charge
Contractor with overall responsibility for the HPCA work, and not necessarily the main tunnel contractor.

Decompression illness (DCI)
All ill health conditions resulting from exposure to pressure and decompression.

Diver medic or diver medic technician (DMT)
The holder of an advanced hyperbaric first aid certificate endorsed by the International Marine Contractors Association (IMCA) or a national equivalent.

Excursion
A period in saturation away from the habitat and spent in transfer under pressure along with time in the working chamber, which can be at a different, usually greater, pressure to the storage pressure.

Gas
Used in this document to mean either oxygen or a breathing mixture.

Gauge Pressure
Pressure above atmospheric pressure as in normal tunnel practice. Pressures given in this document are in gauge pressure.

Habitat
Pressurised living complex normally situated on the surface.

Health and Safety Executive (HSE)
The UK regulatory authority for occupational health and safety.

High Pressure Compressed Air (HPCA) work
Work in compressed air at pressures above historical statutory limits, which in many countries are between 3 and 4 bar (gauge), and which involves the use of breathing mixtures other than compressed natural air and can involve the use of saturation techniques.

Note: In the past it was customary in some countries to describe exposure pressures from which stage decompression was not required as "low pressure" and to describe exposure pressures from which stage decompression was required as "high pressure". It is now proposed that the latter be referred to as "intermediate pressure" i.e. pressures between "low pressure" and the statutory limit.

Isobaric counterdiffusion
A complex phenomenon arising from having different concentrations of different inert gases on either side of a "boundary", e.g. such as blood in a blood vessel within a tissue, as a result of which each gas will diffuse across the boundary down its own concentration gradient meaning that it is possible for the total inert gas partial pressure to exceed the surrounding pressure on either side of the boundary. Consequently gas bubbles can form on either side of the boundary even though the surrounding pressure has not been changed by a decompression move.

Non-saturation exposure ("non-sat" exposure)
A short duration exposure comprising a compression, a working period under pressure, immediately followed by a decompression. It does not involve any storage time in a habitat (equivalent to a "bounce dive" in diving).

Oxygen
Used in this document to mean oxygen of medical or diving grade.

Oxygen toxicity dose (OTD)
Oxygen toxicity unit or oxygen tolerance unit (OTU) – see Unit of Pulmonary Toxicity Dose.

Partial pressure (of a gas)
The pressure of a gas in a gas mixture that the gas would have if it alone occupied the gas filled space (Dalton's Law). It is normally stated in bar and is the product of the absolute pressure of the mixture and the volume fraction of that gas in the mixture. In this document partial pressure of a gas (e.g. oxygen) is shown as PO_2.

Pressure
Pressures in this document are stated in bar (gauge).

Pressure vessel for human occupancy (PVHO)
Manlocks and similar pressure vessels in which persons are exposed to pressure.

Quad
Transportable gas storage consisting of multiple cylinder configurations connected to a common manifold, within a protective frame.

Saturation exposure ("sat" exposure)
A long duration exposure during which the exposed person lives at a storage pressure and can make transfers under pressure to and from the working chamber.

Shuttle
Mobile pressure vessel for human occupancy in which a transfer under pressure is undertaken.

Storage
Maintenance of persons at pressure in a habitat as part of a saturation exposure.

Storage pressure
The pressure to be maintained in the habitat when it is occupied.

Transfer under pressure (TUP)
The transfer of persons between a habitat and shuttle or manlock whilst maintaining those persons under pressure.

Tunnel boring machine (TBM)
A machine which in Europe would come within the scope of EN 16191 (formerly EN 12336).

Tunnelling
In this document tunnelling includes shaft sinking and caisson work.

Unit of pulmonary toxicity dose (UPTD)
A measure of the cumulative oxygen exposure which takes account of partial pressure and time. Also known as oxygen toxicity dose (OTD), oxygen toxicity unit or oxygen tolerance unit (OTU)).

Working period (non-sat exposures)
Time spent under pressure from leaving atmospheric pressure till start of decompression.

Working period (sat exposures)
The elapsed time from when a person leaves the habitat for the working chamber until that person arrives back in the habitat (time from lock-out to lock-in).

1 >> Introduction

1.1. BACKGROUND

In recent years several tunnels have been built which required the application of high pressure compressed air (HPCA) for interventions in the head of the Tunnel Boring Machine (TBM). This is a significant development in hyperbaric activity in tunnelling and has required the transfer of hyperbaric technology and knowledge, from the diving industry to tunnelling.

1.2 SCOPE

These guidelines are intended for use by all parties – including regulatory authorities, clients, designers, contractors, insurers, operators and others involved in HPCA work. These guidelines apply to the use of HPCA in tunnelling. To date, such work has been mainly associated with TBM interventions for maintenance and repair. However it is foreseeable that conventional (i.e. continuous) tunnelling operations may have to be undertaken in HPCA.
Whilst this guidance is intended to apply to HPCA work as defined above, the guidance is equally applicable to intermediate pressure exposures above 3.5 bar.

1.3 MINIMISING HYPERBARIC EXPOSURE

Before undertaking HPCA work in accordance with these guidelines it is implicit that all reasonably practicable measures should have been taken to minimise the number of persons exposed to pressure along with the pressure and duration of each exposure, commensurate with minimising the overall risk to the health and safety of those exposed.

Note: there are measures such as remote wear detection and the use of CCTV which can be used alone or in conjunction with other ground stabilisation techniques (see Cl 1.7) to further reduce the need for HPCA interventions.

1.4 PRESSURISING MEDIUM

In the HPCA work covered by these guidelines, the pressurising medium envisaged in the working chamber
is compressed natural air except where stated otherwise. Non-air mixtures used for breathing are fed through a mask and umbilical. The pressurising medium envisaged in the habitat, shuttle and trunking can be air or breathing mixture as appropriate.
There should be the capability to flush and pressurise manlocks, along with trunking and shuttles where appropriate, with either air or breathing mixture.

1.5 CHOICE OF HYPERBARIC TECHNIQUE

High pressure, non-sat exposures permit only short working periods e.g. for planned routine inspection work, because of the relatively lengthy decompression required from such pressures. Hence for exposures at pressures in excess of 5 bar, saturation exposures should be considered. See Cl 8.1 for further guidance.

Note: saturation exposures are technically feasible at lower pressures where long exposure periods are required.

1.6 EXISTING STATUTORY LIMITS ON PRESSURE

In many countries existing limits on exposure pressure do not appear to have changed since work in compressed air was first regulated. Although there may not be evidence to show how statutory limits were derived, there is ample evidence that they were adequate for the requirements of the tunnelling industry of the day as records show very few exposures to pressures close to the limit. The inference is therefore that they were based on a degree of empiricism which reflected both the state of knowledge and the practical working limits which could be achieved with air breathing in the early to mid-20th century when most countries with statutory limits set these limits. The pressures now being considered for HPCA work are well within the range of pressures routinely experienced in offshore commercial diving. Consequently it is concluded that there is nothing inherently unsafe about exposure to higher pressures per se, provided appropriate safe systems of work are adopted.

1.7 GROUND STABILISATION TECHNIQUES OTHER THAN COMPRESSED AIR

Other ground stabilisation techniques which are utilised in tunnelling include grouting, ground treatment, ground freezing and dewatering. These guidelines deliberately give no guidance on the often complex issues around selection of an appropriate ground stabilisation technique. The guidelines apply to the use of HPCA once the decision has been made to use it.

2 >> Legislation, standards, guidance etc.

2.1 NATIONAL LEGISLATION, STANDARDS AND GUIDANCE

These Guidelines are intended to complement existing national legislation, standards and guidance as appropriate. As HPCA work is still a rarely used but developing technique, few countries are likely to have altered existing legislation and guidance to permit it.
These guidelines build on and should be read in conjunction with the current version of the guidance documents listed in 2.3 and 2.4 (and 2.5 where relevant).

2.2 ILO CONVENTION C167

The International Labour Organisation convention C167 on Health and Safety in Construction has been ratified by 24 countries and requires through Article 21 "Work in compressed air" :

- Work in compressed air shall be carried out only in accordance with measures prescribed by national laws or regulations.
- Work in compressed air shall be carried out only by workers whose physical aptitude for such work has been established by a medical examination and when a competent person is present to supervise the conduct of the operations.

2.3 RELEVANT GUIDANCE SOURCES - TUNNELLING

Although no comprehensive guidance on HPCA has been identified, a number of organisations provide highly relevant background guidance and information on hyperbaric issues. These Guidelines depend extensively on the information which they provide.

2.3.1 ITA Report No 001

The International Tunnelling Association Report No 001 "Guidelines for good occupational health and safety practice in tunnel construction" was published in 2008 and has a section covering work in compressed air. The report was drafted to apply within national statutory limits and consequently does not have specific requirements for HPCA work.

2.3.2 EN 12110 – Tunnelling Machines – Air Locks – Safety Requirements

CEN/TC151/WG4 has confirmed that the current edition of EN 12110 applies only to work in compressed air within national statutory limits, assumed to be between 3 and 4 bar. However WG4 has recognised that EN 12110 could be used to inform requirements for air locks for use in HPCA. Where reference is made to EN 12110, it is the current version of the standard which should be used (see Cl 6.6 for application of EN 14931:2006 "Pressure Vessels for Human Occupancy").

Note: CEN/TC151/WG4 "Tunnelling Machinery" is a working group of the European Standard technical committee CEN/TC151 "Construction Machinery – Safety". WG4 is responsible for EN 16191 "Tunnelling machinery Safety requirements" and EN 12110 "Tunnelling machines — Air locks — Safety requirements".

2.3.3 British Tunnelling Society "Guide to the Work in Compressed Air Regulations 1996".

The British Tunnelling Society (BTS) document "Guide to the Work in Compressed Air Regulations 1996" which was published in 2012, is a revised and updated version of the guidance which was formerly published by the Health and Safety Executive (HSE) as publication L96. The BTS Guide primarily covers work in compressed air within the existing UK statutory limit of 3.45 bar. However the possibility of HPCA work had been foreseen when the Regulations were drafted in 1996. Consequently the "Guide to the Work in Compressed Air Regulations 1996" recognises the use of HPCA and provides extensive guidance on good working practice in compressed air which is of fundamental relevance to HPCA work.

The BTS "Guide" should be taken as the default standard for the principles of good practice in compressed air work within statutory limits in the absence of more rigorous national requirements.

2.3.4 BS 6164:2011 – "CoP for health and safety in tunnelling in the construction industry"

This British Standard has a section giving guidance on work in compressed air. It complements the BTS "Guide" by addressing the design of the tunnel/ground interface, effects of compressed air on the ground and air loss. It also gives guidance on a range of emergency situations which could arise. The principles covered are relevant to HPCA work. The prevention of sudden air loss through the ground is a safety-critical part of HPCA work.

2.3.5 EN 12021 – Breathing gas quality

Compressed air and all breathing gases supplied in connection with HPCA work should comply with EN 12021:2014 "Respiratory Equipment – Compressed Gases for Breathing Apparatus".

2.4 RELEVANT GUIDANCE SOURCES – DIVING

The hyperbaric techniques required for HPCA are very similar to those for diving at similar pressures but without the immersion in water. Consequently there is much relevant guidance to be obtained from diving sources. However unlike in offshore construction where the atmosphere in underwater work habitats can be a breathing mixture, in HPCA work the pressurising medium in working chambers is high pressure compressed air in which the PO_2 and/or PN_2 are likely to be above safe limits. (See Cl 8.8).

2.4.1 Classification Societies

"Classification societies" are the major international insurance companies which set detailed rules for the design, construction and testing of equipment for use in the marine environment. This includes the hyperbaric systems used in diving and other underwater hyperbaric activity. Care should be taken to ensure their application is appropriate, when transposing rules intended for the marine environment to the underground environment. The Contractor in Charge should be aware that these rules will most likely be applied to plant and equipment used in HPCA work as

a condition of the insurance of the works. Classification societies involved in HPCA projects should have good knowledge of tunnelling works. At least one classification society has already developed specific rules covering pressure vessels and equipment for use in the tunnelling environment. Reference is made to classification society rules in these guidelines.

2.4.2 Diving Medical Advisory Committee

The Diving Medical Advisory Committee (DMAC) (see www.dmac-diving.org) is a European organisation comprising diving and hyperbaric medical experts from civilian, military and clinical backgrounds which provides guidance on a range of issues relating to the medical aspects of hyperbaric exposure in diving. Although its guidance is intended for hyperbaric exposure in the diving industry, much DMAC guidance is equally applicable to HPCA exposure.

2.4.3 International Marine Contractors Association

The International Marine Contractors Association (IMCA) formerly the Association of Offshore Diving Contractors (AODC) publishes extensive guidance on non-sat and sat diving issues. IMCA guidance on generic issues associated with saturation exposure is equally applicable to HPCA work.

2.4.4 HSE diving guidance

HSE publishes extensive guidance on commercial diving, some of which is equally relevant to HPCA work.

2.5 ASME PVHO STANDARDS

The American Society of Mechanical Engineers produces standards for pressure vessels for human occupancy (PVHO). Although reference can be made to them as an alternative to EN 12110 or Classification Society rules as a source of guidance, any tunnelling specific requirements in EN 12110 should be adopted in addition to the ASME requirements.

2.6 OTHER PVHO STANDARDS

There are other standards covering pressure vessel design and construction including EN 13445. Although reference can be made to them as an alternative to EN 12110 or Classification Society rules as a source of guidance, any tunnelling specific requirements in EN 12110 should be adopted in addition to those of the standard adopted.

2.7 NATIONAL FIRE PROTECTION ASSOCIATION

The NFPA is an American organisation, widely recognised as a source of authoritative guidance on fire suppression in hyperbaric facilities.

2.8 GUIDANCE FROM OTHER COUNTRIES

2.8.1 Germany

For non-saturation exposures, the “Druckluftverordnung” (Technical regulation for compressed air application) applies. This should be referred to along with the RAB 25 (“Regeln zum Arbeitsschutz auf Baustellen” – Rules for occupational health and safety on construction sites).

2.8.2 Canada

Canadian Standard Z275 .1-05 “Hyperbaric Facilities” provides comprehensive guidance on requirements for hyperbaric chambers including those for saturation systems. Canadian Standard Z275.3-09 provides guidance on work in compressed air.

2.8.3 Switzerland

For non-saturation exposures, a confederate regulation concerning work in hyperbaric environment applies, a revised version of which comes into effect on 1st January 2016. In every case, planned works in high pressure compressed air, as described in this guideline, must be notified and discussed in advance with the responsible authority (Suva - contact via www.suva.ch/bau).

2.8.4 France

France has a series of statutory requirements covering work in compressed air including qualifications applicable to compressed air workers.

3 >> Notifications, exemptions and approvals

3.1 NOTIFICATION OF REGULATORY AUTHORITY

In some countries it is a statutory requirement to notify the regulatory authority for occupational health and safety or labour inspection of the intention to work in compressed air. Whether this is a requirement or not, it is strongly recommended that the relevant authority is notified and their advice sought.

The early engagement of the client, designer(s) and contractor(s) with the national regulatory authority is strongly recommended.

3.2 EXEMPTIONS, VARIANCES AND APPROVALS

In countries where there are statutory limits on hyperbaric exposure, and/or prescribed decompression procedures, it is likely that HPCA work will require formal exemption from or a variation in statutory requirements probably accompanied by a formal approval of part or all of the exposure procedures proposed. Similarly the use of non-air breathing mixtures may require exemption, variance or formal approval. As part of the application process a robust safety case should be prepared and submitted to the regulatory authorities setting out the technical reasons dictating the need for HPCA interventions and justification of the hyperbaric procedures being proposed.

Where exemption, variance etc from national legislation is granted, stringent requirements may be placed by the national regulatory authority on the duty holders.

In countries where there is no statutory power of exemption etc, the advice of the national regulatory authority on how to proceed, should be sought at an early stage in planning the project.

3.2.1 Technical justification

A full technical justification of the proposed use of HPCA should be made including information on likely ground and ground water conditions (see also Cl 5.2). It should include information on proposed tunnel excavation and lining techniques along with information on the manlocks and other plant and equipment required for the hyperbaric interventions.

3.2.2 Exemption

The supporting evidence for an application for an exemption from regulations should include :

- A description of the exemption sought;
- A robust technical and/or medical justification of why the exemption is considered necessary;
- Submissions from expert advisers (see Cl 3.3.4), if any, supporting the exemption;
- Proposals for alternatives to the matter exempted.

3.2.3 Approval of alternative hyperbaric procedures

The package of supporting evidence for approval of alternative hyperbaric procedures or decompression regime should include a description of the compression and decompression procedures, exposure limits and breathing mixtures. Where an alternative decompression regime is proposed, the package of evidence should include :

- A description of the tables to be approved;
- Relevant theoretical derivations;
- Reports of any relevant laboratory evaluation or hyperbaric trials of the tables;
- Details of relevant experience of long-term use using recognised measures of DCI incidence where available;
- A robust technical justification of the likely benefits of the proposals;
- Submissions from expert advisers, if any, supporting the application;
- A scheme for monitoring the overall effectiveness of the hyperbaric procedures throughout their use on site.

Such a scheme should allow for physiological monitoring during and following decompression at the level of individual exposed persons;

- An assessment of the likely risks of decompression illness including dysbaric osteonecrosis using the proposed procedures and a comparison of these risks with those occurring from the use of the existing decompression tables currently used in tunnelling or diving in the country concerned. If there are no existing tables the comparison should be made with internationally accepted good practice;
- Procedures for dealing with omitted decompression, exceptional exposure and emergency decompression e.g. on failure of the oxygen supply during decompression.

Note : a list of additional topics which should be considered for inclusion in the submission is set out in Appendix 1.

3.2.4 Variances

In some countries, the regulatory authority grants variances. These are formal permissions to depart from or vary statutory requirements. Where there is no guidance on how to apply for and issue a variance, the regulatory authority should treat them as exemptions and/or approvals as appropriate.

3.2.5 Derivation of the tables to be used

When relevant the submission should include details of the proposed compression and decompression regime along with information on how the decompression tables were derived and validated. This is not required for nationally recognised tables. However the choice of such tables should be justified.

3.2.6 Mathematical modelling of decompression tables

Physiological and probabilistic mathematical models of the human response to pressure exist for diving research purposes and can be used as part of the process of demonstrating the effectiveness of decompression regimes. There can be limitations on their validity for tunnelling applications due to lack of data for verification purposes.

Some models can be used to predict gas in blood levels and as part of the retrospective analysis of exposure data. Relevant references include HSE Contract Research Report 201/1998 “Decompression risk factors in compressed air tunnelling: options for health risk reduction”, Unimed Scientific Ltd, available from www.hse.gov.uk and “Physiology and Medicine of Diving” 5th Ed, Chapter 10, authors Bennett and Elliott (ISBN-10: 0702025712).

3.2.7 Statistical analysis

A number of recognised parameters for reporting the results of statistical analysis of exposure data are available. Where sufficient data exists it is recommended that single exposure risk factors are used to calculate the incidence of decompression illness and the standardised bends ratio is used for comparison between datasets. Both measures are described by Lamont and Booth in "Acute decompression illness in UK tunnelling", Proc Inst of Civil Engineers, London, Paper 14384, Nov 2006.

3.2.8 Details of personnel, expert advisers etc.

The submission should include details of the qualifications, experience and skills of the main personnel to be used in overseeing HPCA work along with similar details for expert advisers to the project.

3.3 POST-CONTRACT REPORT

On completion of all HPCA work, the Contractor in Charge should prepare a report on the effectiveness of the decompression regimes used on the project. This should be based on the statistical analysis of exposure data and post-decompression physiological monitoring of workers. If possible the report should be published in the tunnelling literature.

3.4 PROHIBITION ON THE USE OF OXYGEN AND NON-AIR BREATHING MIXTURES

Where national regulations prohibit or do not currently allow the use of oxygen and/or non-air breathing mixtures, additional exemptions, approvals or variances should be sought to cover their use. The principles for such applications, set out elsewhere in this clause, should be followed.

4 >> Organisation of works in HPCA

4.1 CONTRACTOR IN CHARGE

Experience has shown that there should be a contractor with overall responsibility for the HPCA work – the Contractor in Charge. The Contractor in Charge should appoint the senior personnel to manage the HPCA work. The Contractor in Charge should be responsible for ensuring that all plant and equipment necessary for HPCA work along with the personnel to operate and maintain that plant and equipment, are immediately available on site. The recommendations in the BTS "Guide", on personnel required and management of work in compressed air should be followed.

4.2 NOTIFICATION OF PUBLIC EMERGENCY SERVICES

The Contractor in Charge should notify the public emergency services for the area of the works, of the HPCA work. In addition any off-site facility operating a hyperbaric chamber to which HPCA workers might be taken in an emergency should be notified of the typical exposure regimes being operated on site, the decompression being undertaken along with the breathing mixtures and gases used. There should be discussions between the CMA along with the contractor's hyperbaric experts and the hyperbaric facility over the maximum pressure capability of the facility and possible treatment regimes which that facility could/should provide, to reflect the exposures being undertaken on site. The facility should have contact details of a responsible person on site with whom contact can be made at any time.

4.3 EMERGENCY PLANNING

Given the relative rarity of any compressed air tunnelling work, the local emergency services may have had no experience of dealing with hyperbaric emergencies. Therefore the Contractor in Charge should assist the services in planning their response to an on-site emergency. That assistance should extend to the provision of equipment and training facilities as necessary. Where the emergency services are unable to enter the pressurised workings, and this is likely to be the norm, the Contractor in Charge should make provision for emergency response in the pressurised workings from within his own resources. Nevertheless the emergency services (fire, rescue, ambulance, paramedics etc) can provide useful assistance in the tunnel as far as the manlock door.

4.4 EMERGENCY EXERCISES

Emergency exercises should be undertaken early in the works period and at intervals of not more than 12 months thereafter. The Contractor in Charge should work with the emergency services to allow them to undertake simulations and joint exercises to improve their ability to respond to emergencies.

4.5 EXPERT HYPERBARIC ADVICE

The Contractor in Charge should have access to expert hyperbaric advice. Likely topics with which the hyperbaric expert(s) should be familiar include international practice in hyperbaric exposure, plant and equipment, the availability and selection of appropriate decompression regimes, gas and breathing mixtures, saturation and TUP techniques if appropriate and human physiology relevant to hyperbaric exposure.

4.6 ROLES TO BE DISCHARGED BY PERSONNEL

It is essential for the execution of HPCA work in a healthy and safe manner that a number of personnel are nominated by the Contractor in Charge to take on various roles relating to the management or undertaking of the work. The Contractor in Charge should nominate a senior person to be responsible for the overall coordination of the tunnelling and HPCA work. All those nominated should be competent and have had relevant previous experience.

It is recommended that the personnel and the roles set out in the BTS "Guide" are adopted for HPCA work but with the changes noted below.

4.6.1 Hyperbaric supervisor

For HPCA work the role of the hyperbaric supervisor as described in the BTS "Guide" should be extended to control and coordination of both the hyperbaric and tunnelling aspects of each intervention. The person filling this demanding role should have had experience of HPCA work or of saturation diving along with experience of air-only mode compressed air work in tunnelling. The roles of the hyperbaric supervisor and the senior person responsible for overall coordination are complementary but the "senior person" noted above is in overall control.

4.6.2 Gas attendant

When deemed necessary by the hyperbaric supervisor and certainly when saturation exposures are being undertaken, there should be a person responsible for the organisation of gas supplies on site. Such a person should either have had previous experience as a gas attendant in HPCA work or have had experience of the management of gas supplies in saturation diving as well as an appreciation of the tunnel environment. The competence to work within a quality control system is essential for this role.

4.6.3 Lock attendant

The lock attendants should have had previous experience of lock keeping at similar pressures to those to be used on site. They should also have had experience of using exposure techniques and breathing mixtures similar to those to be used on site. This experience may have been gained in the diving industry; however familiarity with the tunnelling environment is also necessary. Lock attendants should also control the hyperbaric aspects of TUP shuttle use during transit.

4.6.4 Umbilical tender

When using line fed masks, there should be a person in the manlock or intermediate chamber (see Cl 6.9) to tend the umbilicals of those in the working chamber. One person can tend no more than two umbilicals simultaneously.

4.6.5 HPCA worker selection

Those being exposed to HPCA should be medically fit. In addition they should be instructed in and have sufficient knowledge

of the risks of hyperbaric exposure to be able to work safely in a hyperbaric tunnelling environment using non-air breathing mixtures. They should preferably have had previous experience of working in hyperbaric environments in tunnelling. Inevitably however, because of the rarity of HPCA work, they may come from a diving background. If so they should demonstrate their ability to transfer their skills to HPCA in the tunnelling environment. There are likely to be benefits in HPCA work from building a team of workers made up from both diving and tunnelling backgrounds.

4.6.6 Saturation workers

Because of the nature of saturation working, its psychological and social impact requires special qualities in those doing the work. No-one should be considered for saturation working unless they can demonstrate having successfully undertaken such work previously in either the tunnelling or diving industry or have recently successfully completed specific training and been assessed as suitable. HPCA workers should hold an appropriate qualification such as the French Class 3 "Mention D" qualification (see www.INPP.org) or equivalent or an appropriate sat diving qualification Appropriate internationally recognised diving qualifications are listed on the HSE website at http://www.hse.gov.uk/diving/qualifications/approved-list.pdf.

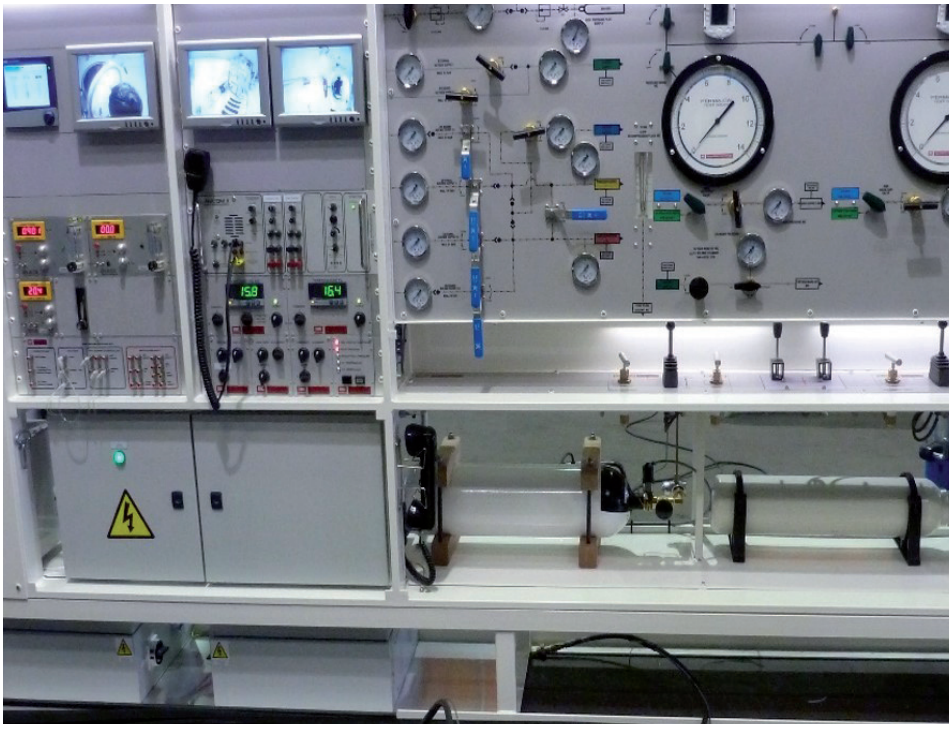

4.6.7 Life support personnel - Habitat

Personnel responsible for operating the habitat and ensuring the safety of those in it should be qualified as life support technicians and have had relevant experience.

4.7 COMMUNICATIONS AND LANGUAGE

In order to reduce the risk of communication errors, at the start of HPCA work, there should be an agreement over which language should be used for communications between all those involved in the HPCA work. The default language should be English.

A protocol for emergency non-voice communication should also be established.

5 >> Safe system of work and operational procedure

5.1 SAFE SYSTEMS OF WORK

The requirements for safe systems of work set out in the BTS "Guide" are generally applicable to HPCA and should be adopted with modifications as necessary to reflect the higher pressures. No productive or maintenance work should be carried out on the TBM which could endanger those undergoing HPCA exposures whilst work in HPCA is being undertaken. Additional requirements are set out in these guidelines.

5.2 STRUCTURAL INTEGRITY, FACE SUPPORT AND AIR LOSS

It is of fundamental importance to the safe execution of HPCA work that the stability of the ground is maintained along with the structural integrity of the tunnel lining including any bulkhead(s) in it. The interaction between the ground and the tunnel structure should also be considered. This is the responsibility of the contractor in charge. Calculations should be prepared by professional engineers with relevant experience, acting on behalf of the contractor in charge to demonstrate that these requirements are being met. The client's designer(s) should formally confirm on behalf of the client, their acceptance of the contractor's proposals.

Independent checking (Category 3) of all relevant calculations should be undertaken. The design input data should be updated as actual data on water table and the geological strata become available from site (see also Cl 1.3). The calculations should be submitted as part of the technical justification required under Cl 3.2.1.

In addition, the contractor in charge should ensure that the correct air pressure is maintained in the working chamber without excessive air loss. Excessive air loss can be defined in this case as exceeding twice the required ventilation flow in an intermediate pressure tunnel which is 0.3 m3 per minute per person in HPCA at tunnel pressure.

Unexpected increases or decreases in air loss can each be a sign of decreasing face stability.

Additional sources of air loss such as around the tailskin of the TBM should be considered and appropriate remedial action taken if required.

Because of the small size of TBM working chambers, a relatively large drop in pressure can result from a relatively small air loss and this should be taken into account when providing reserve compressed air capacity.

5.3 DUTY LOCK ATTENDANTS

There should be two lock attendants on duty at a hyperbaric control panel whenever the health and safety of anyone in saturation or undergoing HPCA exposure is dependent on that panel.

5.4 FACE INTERVENTION PROCEDURES

Before any face intervention takes place, the stability of the ground and the availability of suitable protective measures necessary to enhance stability should be confirmed. The extent of drawdown of excavated material or slurry required, should be carefully assessed to minimise the differential pressure across the face but should be sufficient to provide adequate working space along with space from which to rescue an injured person Face entry procedures should take into account that work within the cutterhead is taking place above a liquid pool or soft soil mass.

Before anyone enters the manlock to be compressed, the working chamber should have been pressurised and air pressure maintained for at least one hour without excessive air loss (see Cl 5.2 above). All valves and gauges should have been shown to be functionally operative.

5.4.1 Slurry TBM

On a slurry TBM, slurry in the excavation chamber should be allowed to seal the face to minimise air leakage, before an intervention takes place. Ensuring that the bentonite slurry (or similarly effective skin forming slurry additive), used prior to or for refilling the excavation chamber during an intervention, has the correct material properties and is subject to strict quality control is an essential aspect of the overall safety of the HPCA work.

5.4.2 EPB TBM

In permeable ground the excavated material in the excavation chamber should be mixed with bentonite slurry (see 5.5.1) during the last advance cycle before entry to the excavation chamber takes place. In cohesive ground the conditioned muck in the excavation chamber can be lowered without prior injection of additional bentonite suspension.

Where very adverse ground conditions are anticipated, a bentonite (see 5.5.1) circuit should be provided on EPB TBMs to allow for a refill or refreshment of the filtercake during long interventions. Refilling with a muck – bentonite mixture would require further excavation which depending on the reason for the intervention might be not possible.

Note: Large EPB TBMs are normally fitted as standard with bentonite (see 5.5.1) injection facilities.

5.5 REFILLING HEAD WITH SLURRY WHILST DECOMPRESSION STILL GOING ON

5.5.1 Slurry TBM

On a slurry TBM, the cutterhead should be refilled with slurry to maintain face support as soon as possible after HPCA work has been completed and the HPCA workers are sealed in the manlock.
This requirement may conflict slightly with requirements in documents such as the BTS "Guide" or EN 16191 regarding energising of equipment on the TBM during hyperbaric interventions, but it is an essential precaution for HPCA work.

5.5.2 EPB TBM

Restarting an EPB TBM in a controlled manner after an intervention is a highly critical activity especially for larger diameter machines. Depending on the face permeability two different procedures are possible. If the face is permeable, bentonite (see 5.5.1) suspension should be pumped into the excavation chamber before restarting the advance. In less permeable soils, it is assumed that the TBM will restart without the need to refill the excavation chamber with bentonite suspension.

Note: Filling the chamber with bentonite may produce a chamber fill that is too liquid to be discharged via the screw conveyor whilst maintaining full pressure control. The restarting procedure eliminates any information about volume loss or mass balance for a significant amount of time and needs very stable face conditions. In critical areas, this problem could be overcome by the injection of an artificial "conditioned soil mix" brought from outside such as a thick inert grout.

5.6 INCHING OF CUTTER HEAD

When designing a TBM for HPCA use, due account should be taken to ensure the requirements in EN 16191 relating to access to the cutter head or excavation chamber and rotation of the cutter head in jog mode can be complied with when access is by means of a manlock.
The control panel inside the chamber should be suitable for the maximum rated pressure including pressure changes (internal pressure compensation).

5.7 ACCESS IN CUTTER HEAD

The increased difficulty in moving around the cutter head and excavation chamber when wearing an umbilical fed mask should be recognised during machine design and construction so that appropriate access and fall prevention equipment along with provision for rescue can be provided.

5.8 WELDING, CUTTING AND OTHER HOT WORK

5.8.1 Minimising hot work risk on TBM

Where it is foreseeable at design stage that maintenance of the cutterhead will have to be done under HPCA, the tools on the cutterhead should be mounted and fixed in such a way that hot cutting or welding is not required when changing them. However hot work may still be required for repair works after accidental structural damage.

5.8.2 Undertaking hot work on TBM

Welding, burning and other hot work shall only be carried out in HPCA in accordance with a permit to work system. Before any work is undertaken, all flammable material in the vicinity of the hot work shall be removed or covered with a flameproof blanket. Those undertaking such work should normally wear outer garments made from a highly flame resistant material such as Nomex or equivalent. These garments should completely cover the head, neck, torso and legs as well as covering the shoes.
Hot work should only be undertaken in one place at a time. Due to the increased fire risk from such work, hot work should be continuously supervised by at least one person on fire watch duties. That person should be equipped with a fire hose so that in the case of a fire immediate action can be taken to extinguish it. The fire watch should be maintained for an hour after completion of the hot work or until the head intervention has been completed and all personnel withdrawn from the working chamber. Due account should be taken of the impact of shift changeover on this requirement.

5.8.3 Fuel gas

The use of any fuel gas under pressure incurs risk and particular care must be taken to prevent leakage of fuel gas. Acetylene should not be used as compressed acetylene can undergo spontaneous explosive decomposition. Carbon arc air cutting or gouging techniques should be considered instead.

5.8.4 Welding fume

Occupational health risks from exposure to welding fume should be low, as all personnel should be wearing line fed masks whilst away from the habitat, manlock or shuttle. Masks should be compatible with the hot work being undertaken. Nevertheless it should be possible to flush the working chamber with air to maintain visibility and to flush the manlocks with breathing mixture to remove welding fume.

Note: It is important to ensure the correct dimensioning and installation of welding supply cables as there have been incidents in the past in which hot cables have been a source of ignition.

5.9 USE OF EXPLOSIVES

Explosives should not be used under HPCA. Non-explosive techniques for rock bursting should be used instead.

5.10 CLAMPING OF BULKHEAD DOORS

It should be possible to clamp shut the door between a manlock chamber and the working chamber as required by EN 12110:2014 Clause 5.3.5.

5.11 CCTV SURVEILLANCE

There should be CCTV surveillance of the plenum chamber so that face stability can be observed during drawdown of material in the cutterhead before any intervention takes place. CCTV should also be used to observe and guide workers in the cutterhead when undertaking maintenance or inspections.

6 >> Plant, equipment and gas supply

6.1 PLANT AND EQUIPMENT

6.1.1 All HPCA work

The Contractor in Charge should ensure suitable and sufficient plant and equipment is available on site, whenever needed, to undertake safely and without risk to health, both the HPCA work, and any action which may be necessary in the event of a reasonably foreseeable emergency connected with the HPCA work. Instrumentation, gauges etc should be sufficiently robust to withstand the rigours of tunnelling.

In the absence of national requirements, the plant and equipment shall meet the requirements of these guidelines along with the requirements in the BTS "Guide", EN 12110 and relevant classification society rules.

Assisting the Contractor in Charge in complying with this requirement is an important part of the hyperbaric supervisor's duties.

6.1.2 Saturation operations

For saturation exposures a transfer under pressure shuttle, a saturation living habitat on the surface for storage of personnel under pressure and handling equipment for the TUP shuttle should be provided. The TBM manlock, the TUP shuttle and all ancillary equipment required for the hyperbaric operations along with the surface living habitat should comply with "Rules for Classification and Construction; VI Additional Rules and Guidelines; 11 Other Operations and Systems; 4 Chamber Systems for Tunnelling" published by Germanischer Lloyd or equivalent.

6.2 ACCESS AND WORKING SPACE ON TBM

In order to undertake HPCA work safely a considerable amount of space is required on the TBM. This is particularly important for saturation exposure and TUP operations. It is not normally possible to have a clear path for the passage of a TUP shuttle from its transport vehicle through a TBM unless due allowance has been made in the design of the TBM. The TBM user and/or Tunnel Owner should advise the TBM manufacturer if TUP operations are foreseeable during construction and the space envelope and handling capability required for the TUP shuttle. The TBM manufacturer must take this into account when designing the TBM.

The working space requirements have a significant bearing on the minimum diameter and type of TBM on which HPCA work can be undertaken. There should be sufficient access and working space around the TBM manlocks to facilitate mating of the shuttle with the TBM lock, and to permit the lock attendants to have access to all control panels, gas quads, umbilical connection points, life support equipment, clamp controls, fire suppression systems etc.

For non-sat HPCA operations the TBM should be designed and constructed to provide adequate working space to access and operate the manlock safely. When HPCA operations are being undertaken a working platform should extend for at least 2 m on the free air side of the manlock door to provide working space and to facilitate the removal of a casualty from the manlocks. The working platform should also accommodate the workstation for the lock attendant and the air lock control panel. Appropriate connection points and pipework for gas supplies including gas for extended or emergency decompression, should also be available when required.

Note: If space on the TBM is limited, the working platform may be a temporary structure which is set up only for the duration of the HPCA work.

6.3 RESTRICTIONS ON HPCA DUE TO TUNNELLING CONSIDERATIONS

6.3.1 Geometrical constraints

Geometrical constraints make TUP and hence saturation exposures using the TBM manlock, impracticable on smaller sized machines normally because of conflict with the screw conveyor and or erector.

Note : Space constraints should be considered likely to occur for EPB machines below 6 m in diameter because of conflict with the screw conveyor and erector and on slurry TBMs below 5 m in diameter because of conflict with the erector.

6.3.2 Smaller tunnels

In smaller tunnels where because of space constraints it is not possible to use a TBM manlock, it will be necessary to install one or more bulkheads in the tunnel. Where fewer than three bulkheads are installed (i.e. a two compartment airlock system has not been formed), a two compartment manlock should be attached to the outbye bulkhead to provide normal emergency access for the working chamber.

As much of the TBM backup equipment as possible should be moved back prior to any interventions to allow the bulkhead(s) to be positioned close to the rear of the TBM shield to minimise the travel distance for workers using umbilicals or any system of overlapping umbilicals, for breathing mixture supply and to allow HPCA personnel to move along the TBM with the minimum of hindrance.

In particular all flammable materials and their storage containers (such as hydraulic fluid tanks and grease) within the HPCA installation should be emptied and removed if possible.

Major electrical installations should be de-energised. It may be necessary to provide residual power to mechanically inch the cutterhead only, for maintenance purposes. Some electronic and touchscreen equipment can also be damaged by the pressurised environment.

6.4 BREATHING MIXTURE SUPPLY

There should be two independent supplies of breathing mixture piped to a control panel. In addition there should be an independent emergency breathing mixture supply to the control panel which feeds a separate core of the umbilical (see Cl 6.11). The minimum quantity of breathing mixture available in the emergency supply is set out in Cl 6.25.3.

6.5 ESSENTIAL SERVICES

Electrical power to essential services in the working chamber should be supplied from appropriate uninterruptible low voltage sources situated outside the working chamber.

The area around the manlocks and control panels should be adequately lit.

6.6 MINIMUM LOCK DIMENSIONS

The dimensions of the manlocks should not be less than those set out in EN 12110.

Note: EN 14931:2006 "Pressure Vessels for Human Occupancy" does not apply to plant in the tunnel or to TUP shuttles but does apply to surface chambers.

6.7 LOCATION OF HABITAT

The habitat should be located on the surface in a purpose built structure and fully protected from adverse weather and temperature fluctuations. There should be a workstation for the lock attendants and the hyperbaric control panel.

The structure should be lit and heated/cooled as necessary. The habitat and associated equipment in the structure should be protected by a water spray or high pressure water mist fire extinguishing system.

6.8 SUITABILITY OF PLANT AND EQUIPMENT

All plant and equipment for use in the hyperbaric environment should be suitable for the maximum foreseeable working pressure taking into account seasonal ground water variations or tidal variations as appropriate. In designing pressure vessels, the effects of pressure reversal on intermediate bulkheads should be taken into account.

6.9 INSPECTION MAINTENANCE AND TESTING

The Contractor in Charge should ensure there are formal inspection maintenance and testing procedures for the plant and equipment, taking account of the maximum foreseeable working pressure. This should also take account of national requirements for the inspection and testing of pressure systems. The procedures should take account of the relevant requirements of the IMCA D 018 Rev 1, the BTS "Guide", EN 12110 and relevant classification society rules along with the requirements of the insurers of the Contractor in Charge. Full records should be kept of all inspection, maintenance and testing.

6.10 SPARE MASKS

There should be a spare mask in the working chamber, kept bagged when not in use, and attached to both the main breathing mixture supply and the emergency supply. In addition there should be a separate mask also kept bagged when not in use and attached to a cylinder containing at least a 10 minute supply of breathing mixture of similar composition to that being supplied by umbilical. The spare masks should be routinely transferred into normal service use and replaced as spares by others.

6.11 UMBILICALS

Each person in the working chamber should have a single multipurpose umbilical supplying breathing mixture, emergency breathing mixture supply through a separate core of the umbilical and communications including helmet mounted camera output (see Cl 6.12) to that person. The umbilical casing should protect the lines from damage. To permit rapid evacuation of the working chamber in an emergency, all umbilicals should originate in a place of relative safety outside the working chamber. This can be in the manlock or in an intermediate chamber which can be securely isolated from the working chamber. This intermediate chamber (motor chamber in Fig 1 below) can be considered as the first point of escape or safe area but should not be considered as a manlock chamber for compression or decompression purposes. There should then be provision for transfer to the manlock chamber whilst still breathing the appropriate breathing mixture.

Note: There can be more than one intermediate chamber on very large TBMs.

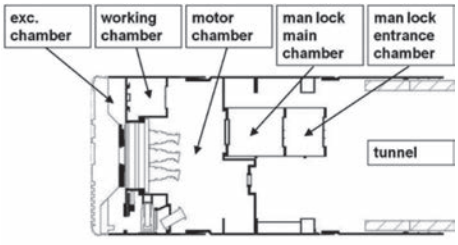

Figure 1: Example of typical intermediate chamber arrangement on slurry TBM.

6.12 COMMUNICATIONS

All masks or helmets for use in the working chamber should be fitted with an appropriate two way communications system linked to the control panel in use at that time.

Helmet mounted cameras are a useful safety aid and are recommended for use in HPCA work. If fitted they should feed the signal back to the relevant control panel.

6.13 TUP SHUTTLE

The shuttle should be designed and constructed in accordance with relevant standards e.g. classification society rules and relevant principles for manlocks. Its size should reflect the guidance on minimum dimensions in EN 12110. The TUP shuttle should be of double chamber construction as for manlocks. Entrance/exit doors at both ends of the shuttle should be considered based on the operational deployment of the shuttle.

The shuttle should be fitted within a protective frame to facilitate lifting and minimise the risk of impact damage. Lifting of the shuttle should normally be done by means of lifting points on the protective frame and not on the pressure vessel. Lifting points should be designed for personnel lifting (or "man-riding") operations. Lifting points on the shell of the pressure vessel used during fabrication of the shuttle should be rendered inoperable by the manufacturer as part of factory testing of the shuttle.

The shuttle in its frame can be wheel mounted or transported on a tunnel vehicle such as a flat car. Where the shuttle in its protective frame is transported on a tunnel vehicle, the protective frame should be secured to the vehicle during travel.

Persons in the shuttle require life support. Normally this comprises a control panel, main gas supply and emergency gas supply, a heating/cooling system, fire suppression system, essential power supply. The shuttle should be covered with thermal insulation where appropriate to minimise heat transfer. These can either be fitted integrally with the shuttle within the protective frame or transported separately and connected to the shuttle by umbilical. Separate appropriate steps should be taken to transport the life support equipment with the shuttle and should

always prevent any strain on or damage to the umbilicals and their connections. Umbilical connections should be designed to facilitate quick connection and disconnection, be self-sealing but also designed to minimise the risk of cross connection.

There should be BIBS in the shuttle for the supply of breathing mixture by mask capable of supplying the intended number of occupants plus one spare.

6.14 ALIGNMENT FOR MATING

In order to effect a pressure tight seal when mating the shuttle with a manlock or living habitat it is essential that the shuttle and manlock or habitat are accurately aligned using some form of guides or docking frame on to which the shuttle can been placed. The manufacturer's tolerances on alignment for mating should be observed.
There should be no transfer of self-weight between vessels by means of the mating clamp. The sole purpose of the mating clamp is to prevent separation of PVHOs and maintain the pressure seal.

Note: If necessary there should be the capability when mating, to lift, move and/or rotate the shuttle to achieve good alignment. Good alignment can also be achieved by controlled movement within the suspension system of the shuttle transport vehicle.

6.15 MATING

Shuttles are normally mated directly to manlocks on the TBM or in the tunnel. However for HPCA applications where only saturation exposures are undertaken, a simplified single compartment PVHO acting as an intermediate chamber can be substituted for the TBM or tunnel manlock . In this situation the shuttle acts as the manlock.
Direct mating of the shuttle to the excavation chamber bulkhead or tunnel bulkhead is considered unsafe and should not be undertaken.

On the surface, mating to a habitat is often done via trunking which can be pressurised. The trunking should be pressurised with habitat breathing mixture to avoid unnecessary contamination of the habitat.

6.16 MATING FLANGE

In the absence of a CEN standard for mating flanges it is recommended that the tunnelling industry adopts an industry standard flange. Details for such a flange are set out in Clause 12 of this document. The dimensions in Clause 12 have been agreed for operating pressures up to 17 bar between leading TBM and PVHO manufacturers in Europe.

Flanges should be kept clean and spare sealing rings for the mating flanges should be held on site.

6.17 MATING CLAMP

It is imperative that it should not be possible to release the mating clamp when the cavity between the doors linking the shuttle to the manlock is under pressure or the trunking between the shuttle and the living habitat is under pressure. The mating clamp should be equipped with a robust pneumatically activated mechanical interlock for this purpose. Where the mating clamp is power operated there should be a manual means of opening the clamp in the event of power failure.

There should be a clearly defined procedure for incrementally increasing or decreasing trunking pressure as part of clamping procedures.

Note: Particular attention should be paid to chamber mating systems. Requirements for interlocking doors on food and medical locks are set out in BTS "Guide" and EN 12110.

6.18 MOVEMENT OF TUP SHUTTLE TO/ FROM AND AROUND THE TBM

When the TUP shuttle is being transported in the tunnel, transport should be by a dedicated train or other vehicles. There should also be a standby locomotive or vehicle available in the tunnel to move the shuttle in the event of breakdown. There should be appropriate mechanical handling equipment to facilitate the transfer of the shuttle between vehicles. Where transport is by train, rerailing equipment should be available in the tunnel.

There should be a ready means of access to the shuttle controls and gas/power connections for use in the event of a vehicle breakdown.

All vehicles involved in TUP transport should have a fixed, automatic or manually operated, onboard fire protection system covering motor compartments, cabs, fuel tanks, switchgear, transmission systems, wheels and tyres as relevant. A "double shot" system may be required to cover the tyres of rubber tyred vehicles to counter re-ignition of the tyres. Movement of the shuttle should preferably be by sliding, jacking or hydraulic lifting platform. The shuttle should be maintained in a horizontal position at all times. The movement path should be designed to avoid the need to lift the shuttle by crane whenever possible. Hydraulic lifting equipment should be fitted with industry standard check valves for personnel lifting. When in the elevated position the platform should be retained in position by mechanical devices and not depend on its hydraulic mechanism. Where lifting by crane cannot be avoided, that crane should be suitable for personnel lifting and be dedicated to shuttle lifting duties only during HPCA operations.

All mechanised equipment for shuttle handling should be considered to be an essential service and meet the relevant requirements for continuity of power supply in EN 16191.

6.19 MOVEMENT OF TUP SHUTTLE IN SHAFTS

Where craneage for TUP handling is required, such as in shafts, the crane must fully meet recognised standards for the lifting of personnel. In the absence of national requirements at the place of use, only cranes with power lowering should be used. There should be a factor of safety of 10 on all hoist ropes and below hook lifting accessories. Lifting of the shuttle in the shaft should be done with the shuttle restrained to prevent rotation and umbilical entanglement if relevant.

Equipment for shuttle handling should be considered to be an essential service and have continuity of power supply (see 6.21).

6.20 LIFE SUPPORT FOR SHUTTLE DURING LIFTING IN SHAFT

Whilst lifting the shuttle in a shaft, the shuttle should be self-sufficient for life support or supplied by umbilical. There should be the

capability to provide extended life support in an emergency – see 6.24.

Where life support is be provided by an umbilical from the surface, arrangements should be made for supporting and handling the umbilical. In this case the life support system for the shuttle should remain under the direct control of a lock attendant.
The fire suppression system in the shuttle must remain immediately operational at all times.

6.21 TRANSFER FROM LOCK TO DEDICATED VEHICLE

There should be sufficient redundancy and/or diversity in the handling system, that a failure of one part of the system does not prevent transfer of the TUP shuttle to the dedicated vehicle.

6.22 EMERGENCY POWER CONTINUITY

All necessary steps should be taken to ensure continuity of power to safety critical equipment associated with the hyperbaric operations for at least the time taken to perform decompression or to remove those under pressure from the tunnel to the living habitat. Such equipment includes lighting, communications systems and emergency air supply for the lock attendant's station.

6.23 EXTERNAL THREATS

The ability to continue to supply power, compressed air and other essential services to the habitat or tunnel should not be disrupted by external threats such as labour disputes, loss of grid power supplies, flooding or adverse weather events.

6.24 AIR AND GAS SUPPLY TO TUP SHUTTLE

When transporting the shuttle in the tunnel it should be accompanied by an appropriate quantity of compressed air and breathing mixture to maintain pressure in and life support to the shuttle for at least 12 hours longer than the predicted journey time. The quantities should be based on maximum occupancy.
An additional quantity of breathing mixture sufficient to pressurise the shuttle to working pressure twice, from atmospheric pressure should be provided. There should be additional non-return valved fittings on to which additional breathing mixture supplies can be connected in an emergency.
Similarly sufficient chemical absorbent to last for the predicted journey time plus 12 hours should also be provided in the shuttle.

6.25 COLOUR CODING OF GAS CYLINDERS AND PIPEWORK

Quads, gas cylinders should be colour coded in accordance with national standards in the country of use or where no such standards exist, in accordance with an internationally recognised colour coding scheme such as EN 1089-3: 2011 "Transportable gas cylinders - Gas cylinder identification (excluding LPG); Colour coding" using the colours set out for "gases used in diving". An alternative standard is ISO 32:1977 "Gas cylinders for medical use – marking for identification of content".
Pipework should be clearly marked at regular intervals with the contents and direction of flow.

6.26 MAN LOCK CONTROL PANEL

6.26.1 Provision of control panel

The control of the HPCA work is a safety-critical operation. The TBM should be designed to incorporate at each manlock a panel from which all hyperbaric operations in the manlock and working chamber can be controlled. During HPCA work, this panel, the manlock, working chamber and all services necessary for their safe operation should be considered "essential services" (term as used in EN 16191), on the TBM. Each panel should be located close to the manlock on the TBM which it controls and should be laid out according to good ergonomic principles.

6.26.2 Requirements for control panel

The control panel design should be such as to :

- Prevent damage to one worker's umbilical interfering with the supply of breathing gas to other workers' umbilicals. The panel design should not require manual intervention by the panel operator to achieve this (see 6.3.5);
- Ensure that any failure of the supply pipework will not permit the loss of any of the other gas supplies to the panel;
- Allow immediate switching to a secondary supply in the event of failure of a worker's primary supply. This should not deprive another worker of his primary supply;
- Prevent the unintended crossover of air, gas or oxygen supplies.

The control panel should incorporate the following :

- All necessary pressure gauges and valves;
- Digital clock with both real time and stopwatch facilities. The display should be clearly visible from a distance of 2m under the lighting conditions in the tunnel;
- Mimic diagram showing the layout, direction of operation and function of all valves and gauges;
- Results of analysis of gas and breathing mixtures;
- Pressure of gas in the supply cylinders;
- Computing facilities for recording and storing exposure and decompression data;
- Essential communication links including helium voice unscrambler;
- CCTV display of the inside of each manlock compartment;
- Temperature gauge for each compartment and the working chamber;
- BIBS feedback pressure lines;
- Water traps.

6.26.3 Provision of gauges

The control panel should provide sufficient gauges each of sufficient size to enable the lock attendant to accurately monitor the pressures of each supply into the panel and the supply to the workers. There should be a separate valve and gauge for controlling the final 2 bar of decompression to ensure accuracy in pressure control. The gauge scale should indicate the pressure in bar.
Digital gauges should be used if they remove susceptibility to vibration.
The fitting of a system to prevent the over-pressurisation of gauges should be considered.
It is recommended that gauges should be calibrated every 6 months or more frequently if recommended by the manufacturer.

6.26.4 Pressure control

A regulator should be provided to reduce the supply pressure to the workers' umbilicals. A relief device should be included to prevent breathing mixture being delivered at excessive pressure to the worker if the regulator fails.

6.26.5 Other requirements for control panel

The control panel should be provided with an un-interruptible power supply.

Seating for the lock attendant at the panel should be provided.

The area should be lit to a minimum standard of 100 lux at working surface level. Emergency lighting with a minimum duration of 12 hours should be provided.

The control panel should be fitted with sufficient air-line fed full face masks to provide a supply of respirable air to enable the lock attendant(s) on duty, to continue to operate the panel even when the tunnel atmosphere is irrespirable. The air supply should have a minimum duration of 3 hours.
In addition, there should be a self-rescuer for each attendant on duty.

When not in use, the panel should be protected from leaks of pressurised fluids, dirt and grout ingress as well as from damage. This can be achieved either by a lockable cover or by removing the panel. If the panel is removed all services to the panel should be securely capped.

The above requirements relating to control panels also apply to the use of HPCA in tunnels where there are bulkheads in the tunnel.

6.27 FACE PIECES - MASKS OR HELMETS

The most suitable mask for purpose should be used, taking account of the need to provide security of fit and to minimise inward leakage. Full face masks or helmets should be used in the working chamber. The breathing resistance should meet diving industry standards. Requirements for masks for welding are set out in Cl 5.8.3.

6.28 VOICE SCRAMBLING DUE TO USE OF HELIUM

Voice distortion will occur from helium based breathing mixtures and appropriate equipment should be provided to compensate for that distortion where required.

6.29 EXCAVATION CHAMBER TEMPERATURE

Immediately after the TBM has stopped the temperature in the excavation chamber is usually too high to allow safe entry without giving rise to excessive risk of heat stress. The tolerable maximum temperature for entry to the cutterhead is around 36 – 40 o C depending on humidity and worker acclimatisation. The CMA should advise on maximum permissible temperature. The excavation chamber temperature should be displayed on the hyperbaric control panel.

Note 1: A water spray cooling system for the cutterhead can reduce waiting time.
Note 2: Chiller systems for the compressed air supply can also be used.

6.30 OXYGEN AND HELIUM COMPATIBILITY

There are well publicised procedures for the ensuring safety in the design, construction and operation of pipework systems containing oxygen. These are set out in the BTS "Guide" and other references and should be strictly adhered to. The use of hyperbaric industry standard specialist materials such as aluminium-nickel-silicon-brass alloys for pipework on control panels and in manlocks, shuttles etc is recommended.

Helium is a highly mobile gas due to its chemical structure and can diffuse through apparently solid materials such as hose linings. Appropriate helium compatible hoses, fittings and valves etc should be used.

6.31 OXYGEN CLEANLINESS

Because of the risk of combustion, all pipework, fittings, valves and other equipment which might be exposed to oxygen or an oxygen enriched atmosphere (>23% oxygen by volume) should be kept thoroughly clean.

Guidance on cleaning for use with oxygen is set out in IMCA D 031.

6.32 REMOVAL OF CARBON DIOXIDE

Where carbon dioxide is removed from any chamber or shuttle atmosphere by chemical scrubbing, two independent scrubbers each with an independent power supply and a reserve supply of chemical absorbent should be provided. A single scrubber should be able to maintain the carbon dioxide level in the atmosphere below the maximum acceptable level.

6.33 OXYGEN MAKE UP

Oxygen make up should be provided for each chamber and shuttle. This can be done through a pressure reducing valve from a cylinder on the control panel. It should inject into or near the fan of the scrubber. Provisions are to be made to prevent over-injecting of oxygen into the atmosphere.

6.34 GAS OR BREATHING MIXTURE QUANTITY

6.34.1 Primary gas supply

The quantity of each breathing mixture required in the tunnel for the HPCA work including an allowance for decompression if relevant, along with an allowance for leakage, wastage and contingencies should be calculated.

6.34.2 Secondary gas supply

A secondary gas supply of at least 33% of the primary gas supply for the working phase of the exposure along with the gas volume required for decompression if relevant should be provided in the tunnel.

6.34.3 Emergency gas supply

An emergency gas supply equivalent in volume to 50% of the secondary supply should also be provided in the tunnel. The emergency gas supply should be connected to the spare gas line in the umbilical.

6.35 SEPARATION OF OXYGEN SUPPLY FROM BREATHING MIXTURE SUPPLY

There should be separate supply lines for oxygen and breathing mixtures along with separate umbilicals and connection manifolds. The pressure of oxygen in the supply lines, or of oxygen rich gases (i.e. higher than 23% oxygen by volume), should be reduced directly at the quad or cylinder to a maximum of 40 bar.

6.36 GAS OR BREATHING MIXTURE SOURCING

Gas and breathing mixtures should be sourced from a reputable supplier normally supplying the medical or diving sectors. The supplier should be able to demonstrate that control of gas purity and blending of breathing mixtures conforms to a quality assurance scheme complying with an internationally recognised standard such as ISO 9001. Gas purity should comply with national standards in the country of use or where there are none, with a recognised standard such as the current version of EN 12021 "Respiratory protective devices. Compressed air for breathing apparatus".

It is essential that all gas including that used to form breathing mixtures, should be of medical or diving quality. For routine HPCA operations only pre-mixed breathing mixtures should be used.

All gas supplied should be accompanied by a certificate of composition.

6.37 SAMPLING AND TESTING

The Contractor in Charge through the hyperbaric supervisor should ensure all gas or breathing mixtures are sampled on delivery to site and again immediately prior to use to confirm their composition is as intended. The Contractor in Charge should ensure that on delivery to site, all gas or breathing mixture cylinders are properly colour coded. Where more than one gas or breathing mixture is used on site, the Contractor in Charge should ensure that proper arrangements are in place for the separate identification, marking, storage and handling of each to prevent accidental misuse.

6.38 GAS MIXING

For sat exposures, a gas mixing and reclaim plant may be set up on site when the quantity being processed is sufficiently large to make it reasonable to do so. The gas mixing and reclaim operation should be set up as a stand-alone operation separate from any HPCA activity and preferably run by a reputable gas supplier. The plant should operate in accordance with a quality assurance scheme certified as conforming to ISO 9001. Cylinders of gas to replenish the stocks on site should have their purity confirmed on arrival at the gas mixing and reclaim plant.

Before leaving the plant for re-use in HPCA work, every cylinder should be tested to check its composition and purity meet the data marked on the cylinder.

All gas or breathing mixture supplied from the plant should be treated as being from an off-site supplier and subject to the equivalent sampling and testing regime. The person testing the gas or breathing mixture on delivery to the HPCA work should not be the same person as tested that cylinder prior to dispatch from the mixing plant.

The Contractor in Charge should not permit the piecemeal mixing of small quantities of breathing mixture on an ad-hoc basis for use in HPCA exposures.

6.39 ON-LINE GAS ANALYSIS

There should be direct sampling of the supply to the masks immediately downstream of the control panel to permit continuous on-line analysis of the oxygen content of the breathing mixture. Analysis should be to an accuracy of +/- 0.1% by volume. An audible and visual alarm should be triggered when the oxygen concentration deviates by more than +/- 1% by volume from the required oxygen content.

Where the breathing mixture is trimix, there should also be the capability for on-line analysis of nitrogen and helium.

6.40 CALIBRATION OF INSTRUMENTATION

Instrument calibration etc should be undertaken in accordance with manufacturer's instructions and recognising the guidance in IMCA D 018 Rev 1 "Code of practice on the initial and periodic examination, testing and certification of diving plant and equipment".

6.41 PROVISION OF GAS IN THE TUNNEL

The Hyperbaric Supervisor should confirm that the volume of breathing mixture required for each supply is available in the tunnel and on the TUP shuttle, if being used, before HPCA work begins. Immediately before use he should satisfy himself that the composition of each cylinder of breathing mixture is correct. He should do the same for any oxygen required for decompression purposes.

6.42 LOSS OF FLOW

Where more than one person is being supplied by umbilical from a single panel, severance or disconnection of one umbilical should not result in loss or deprivation of supply to the others being fed from that panel.

6.43 CLEANING AND DISINFECTION OF MASKS

The cleaning and routine disinfection of masks is important to prevent the growth of microorganisms including fungi, yeasts, bacteria and viruses. Fungi are one of the most likely contaminants and these can produce large quantities of spores. Inhalation of these spores can cause an allergic reaction in the lungs, producing potentially life-threatening conditions, particularly in those individuals who may be predisposed to allergy. The recommendations of HSE Diving Information sheet No 12 "Cleaning of diving equipment" should be followed.

6.44 STORAGE OF MASKS

After cleaning, masks and helmets should be bagged and stored in a clean, dry environment. Masks, helmets and all demand valves should be checked for function and cleanliness before every use.

6.45 CHAMBER HYGIENE

Personal hygiene and the general standard of cleanliness and hygiene of the surface habitat should be in accordance with DMAC 26.

7 >> Occupational health

7.1 PROVISION OF OCCUPATIONAL HEALTH ADVICE

The Contractor in Charge should appoint an occupational health doctor, the "Contract Medical Adviser" (CMA), to advise on all aspects of occupational health arising from the HPCA work. That doctor should hold a recognised specialist professional qualification in occupational health and be familiar with the tunnel environment and competent in current good practice in hyperbaric medicine for the pressures anticipated along with the medical, social and psychological problems of saturation working where appropriate.
The doctor should be the professional leader for the medical aspects of the HPCA work throughout its duration and liaise regularly with the rest of the project team. The CMA needs to be on call whenever an HPCA operation is in progress and be capable of providing professional oversight for the medical response to any medical incident which could occur. Where the CMA is routinely unable to attend site within 30 minutes of being summoned he should appoint a local medical practitioner, acting under his control, to assist.

7.2 HEALTH ASSESSMENT

All those undergoing HPCA work should be subject to a health assessment regime appropriate to the pressures being used. Where appropriate national requirements do not exist, the regime should take the form of a stringent annual medical exanimation to establish fitness for HPCA work coupled with periodic health checks throughout its duration, to ensure continuing fitness for such work. The CMA should advise on the form and content of the examination and health check. The CMA should undertake the examinations and periodic checks unless national requirements dictate otherwise. Reference can be made to the BTS "Guide". The results of both examinations and checks should be recorded. Clinical records should be retained by the CMA in his archive in a secure fashion complying with recognised professional standards. Anyone intending to enter saturation conditions should have a medical check within the 24 hours before entering saturation, to confirm their fitness. This check can be performed by the CMA or by the senior diver medic using an appropriate clinical protocol.
In the event of the CMA changing, or being on holiday, clinical records should be made accessible to or transferred in copy form to the new CMA or locum as part of a professional handover.

7.3 HEAT STRESS IN THE HYPERBARIC ENVIRONMENT

Those undertaking heavy physical work in the hyperbaric environment are at risk from heat stress. Wearing the full face masks required for efficient breathing purposes can further increase the risk as can the wearing of protective clothing when tunnelling through contaminated ground. The risk arises from the reduction in body cooling from sweat evaporation, due to the pressurised atmosphere. The normal indices by which heat stress risk is assessed, such as wet bulb globe temperature are for normobaric conditions only (including exposure to sunlight) and should not be applied to hyperbaric exposure without first seeking expert advice.

Entry into the cutterhead should not be undertaken until its temperature had dropped to around 36 °C. Even then high humidity in the cutterhead chamber can make entry conditions unbearable. The CMA should advise on appropriate conditions for entry.

7.4 GENERAL HEALTH CARE FOR THOSE LIVING IN SATURATION

In addition to normal occupational health provision, for saturation working the Contractor in Charge has to make provision for the general physical and mental healthcare and dental healthcare of those living in saturation. The CMA should be able to advise on these matters also.

7.5 FIRST AID

7.5.1 General requirements

The Contractor in Charge should ensure there is adequate availability of emergency medical and first aid facilities for those under pressure. This should cover the working chamber, manlocks, any TUP facilities and the habitat if in saturation.

Procedures should be in place for treating and decompressing casualties from general injury incidents occurring in the working chamber or the PVHOs.

A protocol should be in place for dealing with major injury during saturation exposures. Periodic exercise of the protocol should be undertaken with a debrief afterwards. Any lessons learned should be incorporated into the protocol. Experience has shown that any TUP of the casualty to an off-site hyperbaric facility is fraught with problems. Consequently part of the on-site hyperbaric facility should be capable of being turned into an emergency medical facility. The CMA should oversee the development and exercise of the protocol and be able to provide medical advice during an injury incident. Consideration should also be given to how specialist medical or surgical support could be provided to the casualty if needed.

7.5.2 Non-sat exposures

All persons undergoing non-sat exposures should have had basic first aid training.

7.5.3 Sat exposures

All workers making saturation interventions should have an appropriate up-to-date first-aid qualification as well as an understanding of the physiological matters relevant to working under pressure. As a minimum two of those under pressure should have a diver medic qualification. At least one person in the team, other than those under pressure should be qualified to a diver medic standard or similar. This person should be in addition to the hyperbaric supervisor because of his need to be in direct control of the operation at all times. There are situations where additional members of the team should be qualified to a diver medic standard, including situations where the worker requiring first aid is under pressure and emergency medical assistance cannot be provided by normal emergency medical services. The Contractor in Charge in his risk assessment, should consider the numbers required to be qualified to this standard.

7.6 BIOLOGICAL INFECTIONS

Bacterial and fungal infections can readily occur in saturation living. The guidance from the DMAC should be observed. No one suffering from such infections of the ear, nose or throat which are normally a bar to entry into compressed air should undertake saturation exposures. Skin infections are an additional bar to saturation work.

7.7 PHYSIOLOGICAL MONITORING

7.7.1 Use of physiological monitoring – effectiveness of decompression

It is recommended that physiological monitoring of tunnel workers during and post-decompression, should be adopted for assessing the effectiveness of decompression regimes in real time particularly when using tables with no history of satisfactory use. The monitoring should be undertaken by recognised specialists using standard protocols. Techniques available include Doppler monitoring and ultrasonic scanning. Research is ongoing to improve the interpretation of the results in the context of tunnelling exposure. The Contract Medical Adviser should be competent to advise on the use of these techniques and other indicators of clinical decompression stress.

7.7.2 Monitoring frequency

All persons exposed should be subject to physiological monitoring in accordance with established protocols for the technique selected. For non-sat exposures, monitoring should be undertaken after each exposure, until the effectiveness of the tables has been established. For sat exposures, monitoring should be undertaken after the decompression following the end of each period in sat.
The need for more frequent monitoring such as during the decompression should be identified by the CMA as necessary.

Thereafter a representative sample of exposures should be checked to confirm the ongoing effectiveness of the tables.

7.7.3 Doppler monitoring

Relationships exist between bubble score and what is considered an unacceptably high risk of DCI. Because of inter and intra-individual variation, no indication of the absolute risk to the individual can be inferred from personal Doppler scores. Based on the Kisman Masurel scale, it is recommended that continued use of a particular decompression schedule be assessed if more than 20% of individuals monitored routinely have Doppler scores of grade III or above. Whilst any grade IV score is considered an unacceptably high risk of DCI, it is not per se a reason to give that person a prophylactic recompression treatment.

Doppler monitoring should be undertaken by a competent technician within the framework of a recognised quality assurance scheme.

7.7.4 Other monitoring

The physiological monitoring should include where appropriate consideration of heat stress and weight loss from dehydration. Sometimes symptoms of physical stress may mimic symptomatic decompression stress. For sat exposures, regular monitoring of compressed air workers for heat stress and weight loss through dehydration may be needed. The CMA should advise on an appropriate monitoring regime and should review the results regularly. The CMA should ensure all necessary preventative and treatment measures are in place.
The symptoms of physical stress can mimic symptomatic decompression stress.

7.8 MEDICAL CAPABILITY

7.8.1 Medical facilities

Guidance on the provision of medical facilities for saturation work is given in DMAC 28 Rev 1 "The Provision of Emergency Medical Care for Divers in Saturation".

7.8.2 Medical equipment to be held at the site

It should always be possible to undertake emergency recompression on site with suitable supporting medical equipment available. In addition it should be possible to monitor blood pressure, pulse rate along with the mood and state of confusion of a casualty. Blood pressure, pulse rate and the ECG can easily be monitored automatically.

Where sat exposures are being undertaken, the medical equipment and supplies set out in the current edition of "Medical Equipment to be Held at the Site of an Offshore Diving Operation" DMAC 15 and DMAC 28 should be available on site. Monitoring equipment should be suitable for use in hyperbaric environments.

7.9 DECOMPRESSION INCIDENTS

The CMA should ensure there are appropriate procedures in place for the diagnosis and treatment of actual and suspected decompression illness arising from the HPCA work. There should also be procedures for dealing with omitted decompression, exceptional exposures and emergency decompression such as required after failure of the oxygen supply during routine decompression.

7.9.1 Decompression illness and saturation exposures

A person reporting DCI in sat should in the first instance be put on oxygen enriched therapeutic breathing mixture at the storage pressure. The storage PO_2 is typically 350 - 450 millibars so the casualty should breathe a PO_2 of 600 - 800 millibars through BIBS. This PO_2 is likely to be the same as working/ excursion mixture. The use of BIBS is to prevent other people in sat getting too high a dose of O2. Consideration should also be given to increasing the storage pressure to the maximum working pressure experienced by the casualty to get the benefit of increased pressure and O2. If required the CMA may advise further pressure increases following protocols depending on the response of the casualty. A consideration in making this decision is whether it is possible to split the chamber occupants to avoid unnecessary exposure risks to the remaining occupants.

O2 breathing at enhanced PO_2 should continue in cycles until symptoms are completely relieved.
This should normally be followed by a dwell

of 12 - 24 hours at the increased storage pressure after which a decompression should be performed to bring the casualty (and entire crew if relevant) back to the original storage pressure.

If DCI occurs following the last scheduled excursion of a saturation campaign, the decompression could start from the maximum pressure of treatment.

The best determinant of the treatment will be the choice of sat tables being used by the contractor since they should be accompanied by treatment schedules and tables stating how to return to the surface following an incident.

Any DCI in sat that does not resolve rapidly on enhanced O2 will add problems of deployment and overall sat duration.

It is useful to remember that DCI in sat divers after in-water dives is uncommon, and that DCS with limb pain only in tunnellers has always been more frequent in the lower limbs allegedly because of the physical strain. In that respect methods of access and maintenance of position while working are important.

7.10 ASSESSING FITNESS TO RETURN TO HPCA WORK AFTER DECOMPRESSION ILLNESS

In non-sat exposures, following a DCI event no one should be exposed to HPCA until declared fit by the CMA. Following a DCI event in sat the casualty should not be exposed to pressure above storage pressure until declared fit by the CMA.

Note: Given the infrequent occurrence of DCI in sat, a CMA lacking experience of dealing with this situation may wish to seek advice from more experienced colleagues, an experienced hyperbaric supervisor or diver medics on the project.

8.1 CHOICE OF ROUTINE EXPOSURE TECHNIQUE

Routine non-sat exposures at high pressure allow for only short working periods (typically 45 minutes at 6 bar (g)). Such exposures typically permit inspection and limited maintenance only to be undertaken. Where significant working periods are required for major maintenance, saturation working should be undertaken. When the exposure pressure exceeds 6 bar the useful working period available with non-sat exposures but still adhering to the 2 hour decompression limit (see Cl8.8) becomes impracticably short and saturation exposure should be considered. For safety reasons, saturation exposure should always be undertaken at pressures of 7 bar and over.

8.2 MINIMUM OXYGEN CONTENT IN CYLINDERS

All inert gas cylinders delivered to site should contain at least a sufficient concentration of oxygen to support life were they to be used in error. Helium cylinders normally contain a minimum of 2% oxygen by volume. Nitrogen cylinders should contain a minimum of 12% oxygen by volume.

Particular care is needed where trimix is used as this can require an oxygen concentration of less than 12%. Mixed gas breathing during compression should only commence once the PO_2 at the point of delivery exceeds 0.2 bar.

All mixtures with an oxygen content greater than 23% oxygen by volume should be treated as pure oxygen.
Where pure inert gas is required the guidance in IMCA document AODC 038 should be followed.

8.3 GAS PROPERTIES AND LIMITS OF EXPOSURE

The following properties of gases and exposure limits should be taken into account when designing a breathing mixture.

8.3.1 Oxygen

8.3.1.1 Minimisation of hyperbaric oxygen dose

Hyperbaric oxygen dose should be kept as low as possible consistent with good hyperbaric practice.

8.3.1.2 Limits on exposure

Oxygen is essential for sustaining life but is toxic at high partial pressures. Any breathing mixture in routine use should provide the user with oxygen at a partial pressure of at least 0.2 bar. There is a threshold for the PO_2 below which toxicity does not seem to occur; this is generally agreed to be approximately 0.5 bar. A PO_2 of 0.6 bar will cause pulmonary symptoms in less than 24 h of continuous exposure in most humans. These limits should be taken into account when determining the oxygen fraction of breathing mixtures for saturation exposures. For non-saturation exposures an upper limit on partial pressure of 1.4 bar should be adhered to.

Higher partial pressures of oxygen are used under appropriately controlled conditions in recompression therapy for DCI using recognised treatment tables.

Excessive long-term or repeated exposure to hyperbaric oxygen is also harmful to health. Such exposure is measured in units of pulmonary toxicity dose (UPTD) (sometimes referred to as oxygen toxicity dose (OTD), oxygen toxicity unit or oxygen tolerance unit (OTU)). The onset of symptoms occurs anywhere from around 400 to 1000 UPTD, with moderate to severe symptoms occurring anywhere from approximately 850 to 1800 UPTD.

The generally accepted upper limit for oxygen exposure for a patient suffering from serious decompression illness has been taken as 1425 UPTD. Exceptionally a limit of 1700 UPTD can be applied for a single severe exposure.

Limits should be placed on maximum daily and weekly UPTD arising from routine hyperbaric exposure. Thus daily limits have ranged from 400 to 615 UPTD; this allows for a possible subsequent recompression therapy whilst still remaining within the allowable total UPTD of 1425.

In order to allow for the cumulative effects of multi-day exposures with some recovery between exposures each day a recommended maximum limit for routine exposure of 400 UPTD daily and 1800 UPTD over any period of seven consecutive days of non-saturation exposures should be adhered to. It should be noted that additional oxygen exposure will be incurred if therapeutic recompression becomes necessary.

The risk of harm from short or long term exposure to oxygen should be reviewed regularly by the Contract Medical Advisor.

8.3.1.3 Symptoms of oxygen toxicity

Oxygen is toxic to both the neurological system and the lungs. A subject's response to high PO_2 is neither predictable nor constant. In this respect it mimics the unpredictability of DCI after even provocative hyperbaric exposures and contrasts with the apparent linearity of symptoms in Nitrogen narcosis. Testing for neurological oxygen susceptibility is not recommended as part of fitness assessments. There are no tests for pulmonary oxygen toxicity susceptibility.

Neurological symptoms are usually acute in onset, and include seizures, facial muscular twitching, nausea, pins and needles, dizziness, loss in coordination, euphoria, fatigue and visual disturbance.
These usually resolve quickly when the PO_2 is reduced, i.e. the source of high PO_2 is removed.
Neurological symptoms have not been reported where the PO^2 is 1.4 bar or less.

Pulmonary symptoms are more dose-related and cumulative over a period of hours or days. Typical symptoms at onset are of tracheitis and bronchitis with irritable throat and coughing. Eventually these become intense with painful inspiration and uncontrollable cough. Pulmonary symptoms resolve within two or three days after exposure has ceased, depending on severity of exposure and injury. Symptoms similar to those in neurological toxicity may also occur. Prolonged and repeated high doses may lead to refractory or permanent lung damage. A more detailed description of symptoms and the nature of oxygen damage can be found in most standard hyperbaric medical texts e.g. "Physiology and Medicine of Diving" 5th Ed, Chapter 10, authors

Bennett and Elliott (ISBN-10: 0702025712).

Retinal damage can also occur as a result of excessive exposure.

8.3.2 Nitrogen

Nitrogen is a narcotic gas at high partial pressures. It also has a high gas density which makes the work of breathing more strenuous. Compressed air or any breathing mixture in routine use containing nitrogen, should provide the user with a partial pressure of nitrogen (PN_2) not exceeding 3.6 bar. This limit is equivalent to breathing air at 3.5 bar (gauge). Due to the narcotic effects of nitrogen, caution should be exercised in breathing air giving a partial pressure of nitrogen (PN_2) of 3 bar and over.

Although exposure to compressed natural air at up to 5 bar is generally accepted in diving practice, the narcotic effect of nitrogen at such pressures should not be underestimated and is considered to create an unsafe and inefficient working situation. Workers suffering from an equivalent level of narcosis due to the effects of alcohol or drugs would not be permitted to enter HPCA.

The narcotic effects of nitrogen exposure whilst breathing a compressed air atmosphere are summarised in Table 1. Physical exercise can exacerbate the narcotic effects.

8.3.3 Helium

Helium is a relatively rare and hence expensive gas. It has a low gas density which facilitates breathing in HPCA at high work rates. It also has high thermal conductivity which can be beneficial in countering the effects of heat stress. Some voice distortion can be expected from helium based mixtures. Exposure to helium at high pressure can lead to high pressure nervous syndrome. The threshold at which this occurs is not clearly defined but can be around 15 bar.

8.4 HELIOX

Oxygen helium (heliox) mixtures are the normal breathing mixtures used in commercial diving at pressures over 5 bar at which pressure saturation exposures normally become mandatory. There is extensive experience from the diving industry of the use of heliox.

8.5 NITROX

Oxygen nitrogen (Nitrox) mixtures can be of use for exposures around the interface between the intermediate and high pressure exposure range but is of little use in normal HPCA work because of the relatively limited range of pressures over which it can safely be used.

8.6 TRIMIX

Trimix is possibly the breathing mixture of choice for non-sat exposures at pressures above 3.5 bar in tunnelling because it reduces gas density and the narcotic effects of nitrogen while requiring only a limited amount of helium. Trimix can also be considered as an alternative to heliox or nitrox for saturation exposures. There is only limited experience of trimix sat because it is not used extensively in diving.

AIR PRESSURE (GAUGE)	SYMPTOMS OF NARCOSIS
< 1 bar	No noticeable symptoms.
1 - 3 bar	Performance of unfamiliar tasks and reasoning slightly impaired. Slight euphoria possible.
3 - 5 bar	Delayed response to visual and auditory stimuli. Reasoning and immediate memory affected more than coordination of limbs. Calculation errors and wrong choices. Idea fixation. Over-confidence and sense of well-being. Euphoria more pronounced to the point of laughter on los of self-control. Noticeably talkative.
5 - 7 bar	Sleepiness, impaired judgement, confusion, hallucination, dizziness. Severe delay in response to signals, instructions and other stimuli. Pronouced euphoria including uncontrolled laughter or hysteria. Terror in some.
7 - 9 bar	Increasing mental confusion, hallucination leading to stupefaction accompanied by some decrease in dexterity and judgement as pressure increases. Memory loss and increased excitability.
> 9 bar	Euphoria, manic or depressive states, loss of awareness of surroundings and time. Incapacitation. Unconsciousness. Death.

8.7 BASIC PRINCIPLES FOR SELECTING BREATHING MIXTURES

There is considerable flexibility when selecting the proportions of each gas in the mixture but the following principles are recommended :

- For non-sat exposures the oxygen content of the mixture should never be less than 16% so that the mixture can be used at all pressures above atmospheric pressure and the PO_2 in the mixture should not exceed 1.4 bar in use;
- For sat exposures the PO_2 in storage should be between 0.35 and 0.45 bar;
- For low oxygen concentration mixtures for use in saturation, the safe lower pressure limit (to ensure adequate oxygen for life support) for the mixture should be identified;
- The nitrogen content should not give a PN_2 of more than 3.6 bar in use;
- It is preferable to select a breathing mixture which reduces the gas density;
- It is preferable to select the lowest number of mixtures which satisfies the above criteria.

For saturation exposures fluctuations in the nitrogen partial pressure between the living and working parts of the daily cycle in saturation should be minimised.

The risk of ignition and fire changes with changing pressure at constant oxygen volume concentration however changes in oxygen concentration have a greater effect on fire risk. Accordingly, there is a "zone of no combustion" within which safe respiration is possible but combustion cannot occur. Likewise there is a "zone of reduced combustion" in which respiration is safe but fire risk is reduced. Where the option exists to reduce the oxygen volume concentration and still maintain a safe respirable atmosphere in the PVHO, the benefits in terms of reduced fire risk by making such a change should be considered.

8.8. AIR BREATHING DURING NON-SAT EXPOSURES

8.8.1 Air breaks during oxygen decompression

Appropriate air breaks should be incorporated in the oxygen stages of any decompression regime used. The ratio should be around 20 to 30 minutes oxygen breathing interspersed with 5 minutes breathing on air as required by the decompression schedule being used.

8.8.2 Period without use of masks

Decompression tables which include periods where a mask is not required to be worn, may be advantageous as they permit communication, rehydration, and comfort breaks for the workers as well as facilitating medical monitoring.

8.8.3 Loss of masks

Appropriate steps to prevent unintentional loss or removal of masks should be taken and those wearing masks should be warned against deliberately removing except on the instructions of the lock attendant.

8.9 AIR BREATHING DURING SATURATION EXPOSURES

8.9.1 Air breathing as part of TUP, decompression etc.

Apart from in the living habitat, the pressurising medium in HPCA work is normally compressed air.

Consequently breathing the pressurising medium becomes increasingly undesirable to the point of being dangerous as pressure is increased, due to the narcotic effects of exposure to high pressure nitrogen and the toxic effects of exposure to high pressure oxygen. However it can be expedient for persons to transfer through the trunking between PVHOs without having to wear masks or to have to provide a mixed gas atmosphere in the manlock, shuttle or trunking. Likewise it can be useful for those who are away from the habitat to breathe air to facilitate comfort breaks, rehydration etc as part of the decompression for return to the habitat. Should air breathing or any gas switch be deemed an essential part of hyperbaric operation, the upper pressure for such activities should be 5 bar or other such pressure as determined by the CMA in conjunction with any hyperbaric advisers retained by the contractor taking due account of the breathing mixtures being used, the narcotic effects of nitrogen, narcotic shock, gas diffusion and the toxic effects of oxygen. Where air breathing is part of the exposure procedure, mask removal should be done one worker at a time.

8.9.2 Unintentional loss or removal of masks

There are pressures at which the unintentional loss or removal of masks is dangerous and the immediate onset of narcotic symptoms or loss of consciousness can be expected to occur (see Table 1). At these pressures the compressed air environment in the working chamber is toxic and irrespirable. Risks leading to unintentional loss or removal of masks to umbilicals should be identified and mitigated appropriately as far as possible such as by the use of helmets rather than masks. Those working in saturation should be specifically instructed on the risks associated with loss or unauthorised removal of masks. The use of CCTV and effective supervision from outside the working chamber will reduce risks further. However there is no accounting for panic responses. There should be good communications and a suitable contingency plan to deal with a «lost» mask situation.

8.10 EXPOSURE LIMITS - NON-SAT EXPOSURE

For reasons of worker comfort and control of hyperbaric exposure the more conservative of the following criteria should be adhered to :

- The exposure period should be such as to require a decompression time in the manlock of not more than 2 hours. If longer decompression is required it should take place in a saturation habitat.
- The total of exposure period and decompression time should not exceed 3 hours.

8.11 SHIFT PATTERNS – NON-SAT EXPOSURES

For non-sat exposures a shift pattern of five days on, two days off should be adopted.

8.12 DECOMPRESSION TABLES

The Contractor in Charge should select the decompression tables to be used taking account of the advice of his expert hyperbaric advisers and the Contract Medical Adviser.

Tables with a proven history of effectiveness are to be preferred. Un-proven tables should be subject to a stringent verification process before they are put into routine site use.

8.13 TREATMENT TABLES, OMITTED DECOMPRESSION TABLES, OVER RUNNING PERMITTED EXPOSURE PERIOD

As part of the safe system of work, the Contractor in Charge should with the advice of the CMA, identify appropriate treatment tables for use in treating DCI.

Similarly, the Contractor in Charge should with the advice of the CMA identify procedures for dealing with omitted decompression and extended exposure periods. Extended exposure periods should not be allowed unless the extension is short. Extended exposure periods should not be used to compensate for insufficient numbers of suitable compressed air workers or inadequate work planning. Additionally, procedures for dealing with the use of incorrect breathing mixtures during exposure if relevant should be drawn up.

8.14 LOSS OF OXYGEN SUPPLY DURING DECOMPRESSION

There should be procedures in place including an appropriate air-only decompression table for use in the event the oxygen supply fails.

8.15 LIVING HABITAT FOR SATURATION

The chambers in which workers live whilst in storage should be designed and constructed in accordance with the relevant requirements of one of the classification societies. They should normally be sited on the surface.

It is recommended that there is a minimum vertical clearance of 2 metres above the floor of the living chamber and a minimum volume of at least 4 cubic metres per occupant in the habitat complex. Some classification societies set additional requirements for living chambers covering bed size and washing/toilet facilities.

The layout of the living chambers and system of work (team size, shift patterns, etc) should allow occupants to have the required periods of undisturbed rest.

8.16 LIVING IN SATURATION CONDITIONS

For saturation working, the Contractor in Charge has to extend the safe systems of work to cover the welfare and well-being of those in the living chambers between excursions. This includes the provision of food and drink, the maintenance of a comfortable living environment, the provision of washing and toilet facilities, first aid and medical provision. The normal standards of the saturation diving industry should be followed.

8.17 SATURATION SHIFT PATTERNS

In order to ensure safe and efficient operations, HPCA personnel should work within a time routine which allows them to develop a regular work and sleep pattern and should where possible coincide with the normal daytime/night time regime. The minimum rest period in the living complex should be 12 hours (i.e. not working or carrying out pre or post-work checks). Therefore, when operations are carried out on a 24/7 basis only one work period per 24-hour period is recommended and that work period should occur within the same time period each day relative to the start time of the site working day with a maximum excursion of 8 hours.

8.18 DURATION OF SATURATION EXPOSURES AND SURFACE INTERVALS

Where relevant national requirements do not exist, it is recommended that no one who is an experienced saturation worker should experience a saturation exposure exceeding 28 days under pressure. Otherwise the exposure should not exceed 14 days. Thereafter that person should not undergo any further exposure to HPCA until at least an equal interval of time at atmospheric pressure has elapsed.
A person's cumulative saturation exposure should not exceed 13 weeks in any 26 week period.

8.19 WORKING PERIOD

The maximum working period in sat is calculated from initial lock-off until the final lock-on to the living complex and personnel are ready to transfer. No more than one working period per day is recommended. The maximum working period away from the living complex should be 8 hours in a 24 hour period. The working periods set out in these guidelines may need to be reduced for very heavy work.

As personnel are involved in tiring physical work, the hyperbaric supervisor should appreciate that it may be appropriate for them to return to the manlock periodically for a short rest and to take refreshment before finishing their task. In any case, the hyperbaric supervisor should ensure that the personnel have a refreshment break of at least 15 minutes, between 3 and 4 hours into the working period.

8.20 HYPERBARIC OPERATIONS

During the transfer from shuttle to chamber or living complex and back again every effort should be made to avoid changes in temperature, in the composition of the mixture being breathed and physiological effects including isobaric counterdiffusion.

Final decompression to atmospheric pressure should not be started with an excursion to a lower pressure than storage pressure. There should be a 12 hour stop in the habitat before final decompression begins unless there has been no excursion involving a working pressure higher than storage pressure in the preceding 12 hours.

8.21 STORAGE PRESSURE

The storage pressure will be determined by and may be altered by the hyperbaric supervisor after discussion with the Contractor in Charge and CMA.

8.22 EXCURSION PRESSURE

Excursions should normally be restricted to 1 bar in excess of storage pressure to minimise the risk of DCI. DCI is unlikely to result from a pressure change of this magnitude.

8.23 REMAINING ON SITE AFTER DECOMPRESSION

Personnel undergoing HPCA exposures should remain on site or its immediate vicinity, for 2 hours after decompression from non-sat exposures and for 24 hours following sat exposures. This will allow time for physiological monitoring to be undertaken.

8.24 ASCENT TO ALTITUDE

Personnel undergoing HPCA exposures should not fly or otherwise ascend to altitude in excess of 150 metres or 500 feet e.g. mountaineering or driving over hilly terrain, for 24 hours after decompression. Where geographical or logistical conditions render this requirement un-acceptably restrictive, Contract Medical Advisers should produce local rules for travel which involves ascent above this height.

9.1 RECORD KEEPING

Exposure records should be made in the agreed language of communication for the HPCA work is being undertaken. Records should be held in electronic format using one of the internationally available office software packages. Record keeping should generally be as described in the BTS "Guide" along with any additional requirements of the national regulatory authority. In addition a full record of the composition of all breathing mixtures and gases used along with the times and pressures at which they were used should be kept for each working exposure and subsequent decompression. Gas purity records should also be kept.

9.2 RECORDS OF SATURATION WORKING

9.2.1 Individual recording

For saturation exposures, a full record for each person exposed should be kept starting at the point of initial compression until the end of the final decompression, including details of each excursion from the storage habitat. On termination of employment, each person exposed should be given a full record of his exposures on the project including details of breathing mixtures used, exposures or excursions undertaken, details of training received, results of medical surveillance, along with details of any decompression illness events experienced and their treatment.

9.2.2 Exposure log

There should be a full record kept of the saturation exposure including details of supervisory personnel, all changes of pressure, gas mixture, incidents, lock outs and lock ins, illness or injury and other relevant issues. It should be retained until the end of the contract period. It should be signed off at the end of the period by the senior representative of the contractor in charge.

9.2.3 Individual log books

For sat exposures, all lock attendants and life support personnel should keep logbooks recording their role in the operations. It should be signed off at the end of the period by the senior representative of the contractor in charge.

9.3 DISTRIBUTION OF RECORDS

On completion of the work, in addition to copies of the records given to individuals and their employers, a copy of all records, in its official language, should be offered to the national regulatory authority for occupational health and safety in the country where the work was undertaken.

9.4 RETENTION OF RECORDS

The Contractor in Charge should retain the records in the company archives for a period of 40 years from the end of HPCA work.

9.5 HEALTH AND MEDICAL RECORDS

Access to health and medical records should generally be as described in the BTS "Guide" along with any additional requirements of the national regulatory authority.

10 >> Emergency procedure and fire

10.1 EMERGENCY PROCEDURES AND CASUALTY EVACUATION

The Contractor in Charge should draw up a comprehensive set of emergency procedures covering reasonably foreseeable emergencies including those which require the evacuation of personnel and casualties to a place of safety on the surface. The Contractor in Charge should ensure that all necessary equipment and personnel identified in the procedures is immediately available for deployment and that a comprehensive test of the evacuation procedures is undertaken and recorded before any HPCA work begins. Procedures should be revised as necessary during the course of the works and further tests carried out.

Typical emergencies include but are not limited to :

- Medical emergency or injury to a person in the working chamber/manlock/TUP shuttle
- Fire in working chamber, man lock of other PVHO
- Fire on TBM
- Fire elsewhere in tunnel
- Fire on TUP shuttle transport vehicle
- Breakdown of transport vehicle
- Fire affecting saturation living complex
- Umbilical damage
- Excessive air loss through tunnel face
- Blow out
- Ground collapse
- Lifting equipment failure
- Lock attendant taken suddenly ill or otherwise no longer available
- Loss of air pressurisation supply
- Inability to dock TUP shuttle
- Loss of communications systems
- Loss of electrical power
- Loss of gas supply to any PVHO
- Oxygen toxicity incident in PVHO
- Mask malfunction or accidental removal
- Exceptionally adverse weather
- Disruption to gas supplier's business.

10.2 ACCELERATED EMERGENCY DECOMPRESSION FROM SATURATION

An accelerated emergency decompression (AED) protocol should be developed so that in the event of life threatening injuries or illness and only when the CMA deems the risk to the patient from decompression illness to be less than the risk from the illness or injuries, an accelerated decompression can be undertaken. This should be in accordance with the guidance in DMAC 31, AED should only be done under the direct supervision of the CMA.

10.3 FIRE PROTECTION WITHIN AND AROUND THE TBM LOCK, SHUTTLE, HABITAT ETC.

The requirements of the BTS "Guide" and EN 12110 in respect of fire prevention and suppression apply and should be supplemented by the outcome of a project-specific fire risk assessment of the HPCA work being undertaken and all relevant site conditions. No productive work or maintenance work should be undertaken elsewhere on the TBM whilst HPCA work is underway.

10.4 FIRE RISK MITIGATION

Because the pressurising medium in the shuttle, manlocks and working chamber is normally compressed air, the fire risk in HPCA work will be very high due to the greatly elevated PO_2. All practicable steps through design, construction and systems of work should be taken to eliminate sources of ignition and fuel sources from the shuttle, manlocks and working chamber. Whenever practicable but avoiding any problems due to isobaric counter diffusion or to absorption or deabsorption of inert gas through the skin, the shuttle atmosphere should be pressurised with breathing mixture rather than with compressed air to reduce the fire risk.

The choice of breathing mixture for storage in the habitat should take account of the reduction in ignition and fire risk which can be achieved by reducing the oxygen volume concentration in the breathing mixture used.

The normal ban on materials for smoking should be extended to include electronic cigarettes.

10.5 FIRE PROTECTION IN SHUTTLE, MANLOCKS AND HABITATS

Every shuttle, manlock or habitat should have a self-contained pressurised water fire suppression system. The system for each compartment should comprise a reservoir tank of water constantly pressurised by high pressure inert gas and feeding fixed discharge nozzles in the compartment to which it is connected. It should not be possible for the inert gas to break through into the compartment. Activation, operation and duration of the suppression system should be in accordance with the requirements of Section 14.2.5.2 of NFPA 99 "Health Care Facilities Code" published in 2015. Activation of the system should be possible from both the inside and outside of the chamber and activation should automatically trigger a fire alarm warning at the chamber control panel.

Spray or mist systems can be used however their performance in soaking and cooling the interior of the compartment to extinguish a fire and prevent re-ignition should be shown to be as effective as a deluge system. The spray or mist should not result in an irrespirable atmosphere being formed in the compartment.

10.6 FIRE PROTECTION SHUTTLE TRANSPORT VEHICLE

Any vehicle involved in transporting the shuttle on the surface or in the tunnel should have an onboard fire suppression system covering the engine compartment, fuel tanks, tyres and cab as a minimum.
Vehicles used in the tunnel for shuttle transport should comply with EN 1889 or equivalent.

10.7 FIRE PROTECTION FOR SURFACE FACILITIES

These buildings should be constructed from incombustible materials whenever possible. The buildings housing the saturation living complex should be fitted with a comprehensive spray or mist system. Sufficient mass of water should be discharged to soak and cool the structure sufficiently to prevent re-ignition.

The control panel should be equipped with at least one independent compressed air respirator for the lock attendant.

In addition, there should be an emergency air supply or sufficient oxygen self-rescuers at the control panel for everyone normally working there.

10.8 FIRE PROTECTION FOR GAS CYLINDERS ON SURFACE

Gas cylinders on the surface should be stored in a well ventilated and secure enclosure. It should be physically separated from other buildings or protected by a suitable fire wall.

Cylinders in use for the habitat should be protected by a water sprinkler system.

10.9 HYPERBARIC SELF-RESCUERS IN THE WORKING CHAMBER

A compressed gas self-rescuer for use in hyperbaric environments was shown to be feasible by HSE in the 1990s but its manufacturers never put it into mass production. The concept has been shown to be technically feasible. There is no restriction by HSE, on others to develop the concept further.

11 >> Information, instruction and training

11.1 INFORMATION, INSTRUCTION, TRAINING

All those undergoing HPCA exposures should be given appropriate training in the risks from such work and how these risks should be mitigated along with the tasks to be undertaken.

An appropriate qualification for HPCA sat workers is the French Class 3 “Mention D” qualification or equivalent, or an appropriate sat diving qualification. Reference should be made to the INPP website and BTS “Guide” for a comprehensive list of topics. The training should take full account of site procedures. The theoretical training modules of internationally recognised diver training qualifications give an indication of the level of hyperbaric knowledge required for non-sat and sat HPCA workers.

Most of the HPCA interventions to date have been undertaken by personnel with diving experience. However it is foreseeable that conventional tunnelling operations may have to be undertaken in HPCA. Personnel for such work would require experience as miners in conventional tunnelling techniques. The additional training required to make such persons competent to work under HPCA would be extensive and should reflect the risks associated with the work to be done.

11.2 TRAINING FOR MOVING SHUTTLE

Trials in moving the shuttle between the surface habitat and the TBM or tunnel manlock should be undertaken before the shuttle is used for TUP. Unless the shuttle is regularly moved between surface habitat and the tunnel manlock, periodic exercises should be undertaken to maintain the expertise in TUP procedures.

Shuttle mating with the TBM should be part of the TBM factory acceptance test likewise mating of the shuttle with the habitat should be part of testing the living habitat.

12 >> Industry standard flange details

In the absence of a CEN or ISO standard for mating flanges for use in HPCA applications it is strongly recommended that for pressures below 17 bar the flange dimensions and materials specified below are adopted as an industry standard. The dimensions and materials illustrated have already been used on a number HPCA contracts.
It remains the responsibility of the user to undertake all necessary design calculations, fabrication checks and pressure tests to ensure the flanges are safe for use in their particular application and meet the statutory requirements of the country of use and the requirements of the user's insurers.

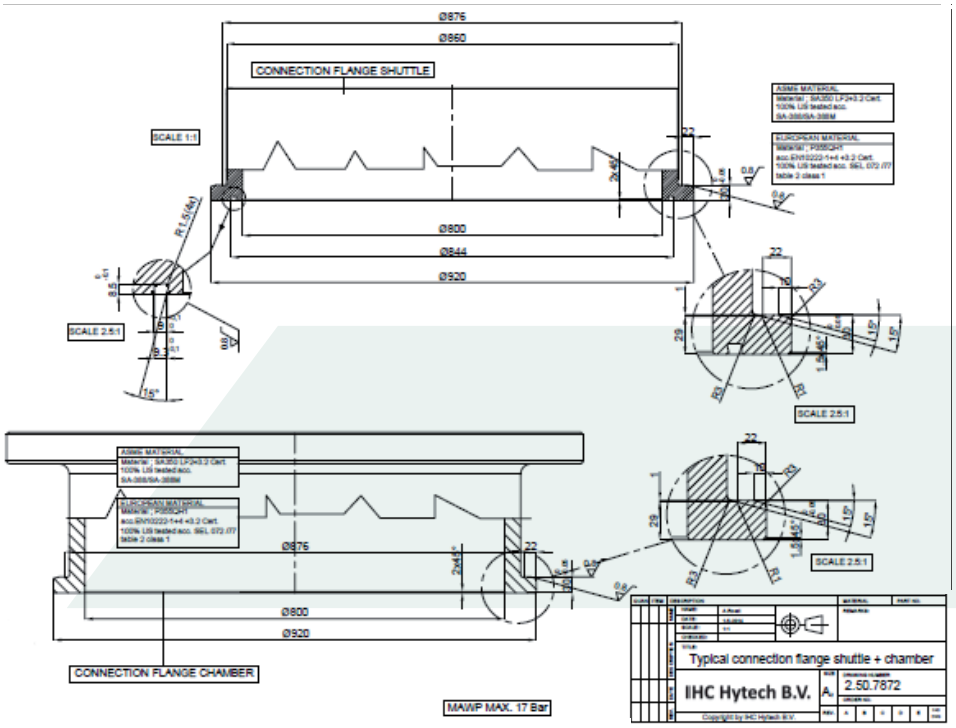

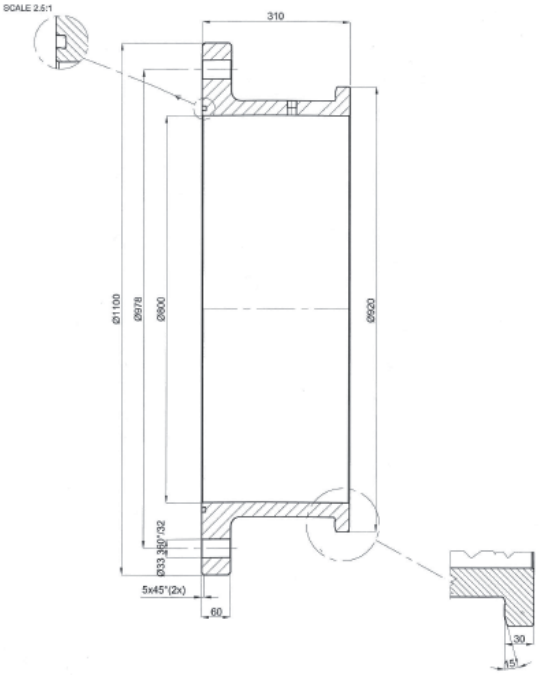

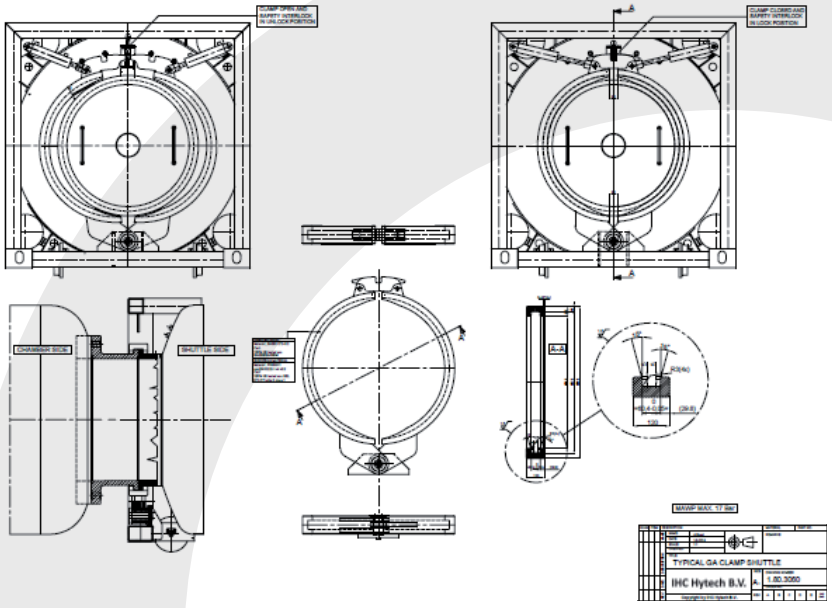

13 >> Acknowledgements

In addition to the contributions from their respective members, ITA WG5 and BTS CAWG acknowledge the direct or indirect contribution to the drafting of ITA Report 10 from Advanced Marine Pte Ltd, Babendererde Engineers, Ballard Diving and Salvage, Dräger, Herrenknecht, Germanischer Lloyd, Health and Safety Executive, Hyperbaric and Tunnel Safety Ltd, IHC Hytech, JCLP Hyperbarie, Dr J King, Tony Ridley Hyperbaric Associates, CEN/TC151/WG4, Hyperbarie SARL, McNally Corporation, Dr W Sterk, Vinci and Washington State DoT.

The further contribution of many of the above to this first revision is also acknowledged.

The provision of specimen drawings by IHC Hytech BV for inclusion in Clause 12 is gratefully acknowledged.

14 >> Appendix 1 - content of submission

The submission should act as a method statement, health and safety plan and risk assessment for the hyperbaric works. For saturation exposures in particular it is likely to be a lengthy document. It should cover as a minimum:

- Project description;
- Ground conditions;
- Description of TBM and its operation etc;
- Work activity to be undertaken in hyperbaric environment;
- Relevant guidance etc;
- Justification of methodology chosen;
- Detailed methodology for non-saturation exposures – gas mixes, exposure limits, compression/decompression regimes, operational procedures, environmental control;
- Detailed methodology saturation exposures – gas mixes, exposure limits, TUP, shift patterns, compression/decompression regimes, operational procedures, environmental control;
- Hyperbaric plant and equipment – airlocks, TUP shuttles, habitat, umbilicals, masks etc;
- Management and coordination arrangements for tunnelling and hyperbaric work;
- Gas management;
- Working procedures;
- Inspection and maintenance procedures;
- Record keeping;
- Health and safety procedures;
- Fire safety;
- Provision of life support under normal and emergency conditions;
- Chamber hygiene;
- Organisation;
- Personnel – CVs and duties;
- Training;
- Medical provisions – health surveillance and preventative measures;
- Medical provisions – illness and injury;
- Emergency procedures.

longrine 04 90 14 48 48 - (21166 - 05/15)

ITA Secretariat c/o EPFL - Bât. GC - Station 18 - CH - 1015 Lausanne - Tel. : + 41 21 693 23 10 - Fax : + 41 21 693 41 53
Email : secretariat@ita-aites.org - Web : www.ita-aites.org